COURSE MATERIAL

II Year B. Tech II- Semester

MECHANICAL ENGINEERING

AY: 2025-26

Manufacturing Processes

R24A0311

Prepared by:
Mr. Soma Vivekananda
Assistant Professor

MALLA REDDY COLLEGE OF ENGINEERING & TECHNOLOGY

DEPARTMENT OF MECHANICAL ENGINEERING

(Autonomous Institution-UGC, Govt. of India)
Secunderabad-500100, Telangana State, India.
www.mrcet.ac.in

MALLA REDDY COLLEGE OF ENGINEERING & TECHNOLOGY

II Year B. TECH - II- SEM **L/T/P/C**

3/-/2/3

(R24A0311) Manufacturing Processes

COURSE OBJECTIVES:

1. The primary objective of this course is to introduce the concept of manufacturing technology with the help of various casting processes widely employed in industries.
2. The course consists of welding and its classifications with the related details of equipment and applications.
3. To understand various metal forming, hot and cold working process. To appreciate the capabilities, advantages and the limitations of the processes.
4. To understand the various concepts of extrusion, forging processes, drawing, its classification and their applications.
5. To understand the various concepts of additive manufacturing and its advance techniques along with their applications.

UNIT-I

Casting: Pattern, Pattern materials, Pattern making, allowances of pattern and Pattern types., Casting process

Types of casting: Continuous casting, Squeeze casting, vacuum mould casting, Evaporative pattern casting, ceramic shell casting, Casting defects., Molding process, Types of Molding process: Injection Molding, Blow molding.

UNIT-II:

Welding: Introduction, Types of weld joints, Types of welding process: Gas welding, Arc welding, Electron beam Welding, Laser beam welding, Friction Stir Welding, Ultrasonic Welding, Thermite welding., Types of Arc welding process: Shielded metal arc welding, Submerged arc welding., Types of Gas welding process: GTAW, GMAW., Types of Resistance welding process: Spot welding, Seam welding., welding defects – causes and remedies, Heat affected zones in welding.

UNIT-III:

Extrusion and Forging: Basic Extrusion process and types, Forging operations and its classification., drawing: wire and tube drawing, Swaging, Blanking, Piercing, Punching and Trimming.

Cutting of Metals: Oxy – Acetylene Gas cutting, Water Plasma Cutting, TIG cutting, MIG cutting, Soldering, Brazing.

UNIT-IV:

Metal Forming: Introduction, forming processes - Bending, Coining, embossing, rolling: types of Rolling and Roll mills, Strain Hardening, Recovery, Recrystallization and Grain growth

Advanced Metal Forming Process: Details of High energy rate forming process, Electro Magnetic Forming, Explosive Forming, Electro-Hydraulic Forming, Contour Roll forming.

UNIT-V:

Additive manufacturing: Introduction to Rapid Prototyping, material, applications, limitations., Techniques: Photo polymerization, Stereo lithography, Powder Bed Fusion, Selective Laser Sintering, 3D Printing, Laminated Object Manufacturing.

TEXTBOOKS:

1. Manufacturing Technology, P.N.Rao,TMH
2. Manufacturing Technology, Kalpak Jain, Pearson education.
3. Production Technology, R.K.Jain

REFERENCE BOOKS:

1. Principles of Metal Castings, Rosenthal.
2. Welding Process, Parmar
3. Manufacturing Technology, R.K. Rajput, Laxmi Pub
4. Manufacturing Engineering &Technology, Kalpak Jain,S.

COURSE OUTCOMES:

1. Apply the knowledge of mathematics, science, engineering fundamentals, and an engineering specialization to the solution of complex engineering problems.
2. Acquire knowledge and hands-on competence in applying the concepts of manufacturing science in the design and development of mechanical systems.
3. Competence to design a system, component or process to meet societal needs within realistic constraints.
4. Demonstrate creativeness in designing new systems components and processes in the field of engineering in general and mechanical engineering in particular.
5. An ability to formulate solve complex engineering problem using modern engineering and information Technology tools.

UNIT I

CASTING

Metal Casting

Virtually nothing moves, turns, rolls, or flies without the benefit of cast metal products. The metal casting industry plays a key role in all the major sectors of our economy. There are castings in locomotives, cars trucks, aircraft, office buildings, factories, schools, and homes. The following Fig 1. shows some metal cast parts.

Metal Casting is one of the oldest materials shaping methods known. Casting means pouring molten metal into a mold with a cavity of the shape to be made, and allowing it to solidify. When solidified, the desired metal object is taken out from the mold either by breaking the mold or taking the mold apart. The solidified object is called the casting. By this process, intricate parts can be given strength and rigidity frequently not obtainable by any other manufacturing process. The mold, into which the metal is poured, is made of some heat resisting material. Sand is most often used as it resists the high temperature of the molten metal. Permanent molds of metal can also be used to cast products.

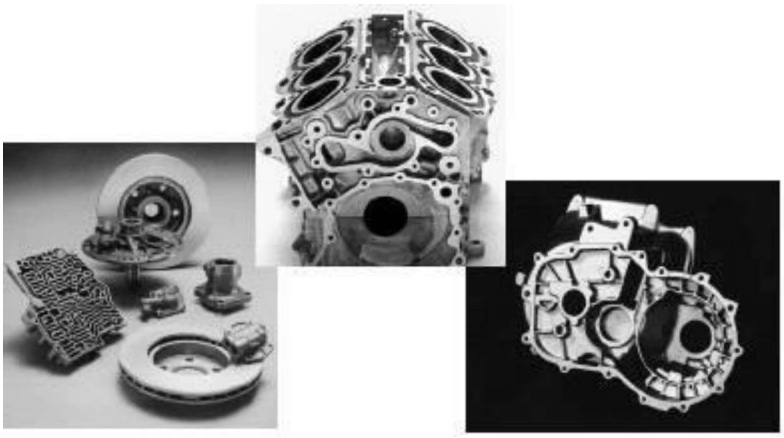

Fig. 1: Metal Cast parts

Advantages

The metal casting process is extensively used in manufacturing because of its many advantages.

1. Molten material can flow into very small sections so that intricate shapes can be made by this process. As a result, many other operations, such as machining, forging, and welding, can be minimized or eliminated.
2. It is possible to cast practically any material that is ferrous or non-ferrous.
3. As the metal can be placed exactly where it is required, large saving in weight can be achieved.
4. The necessary tools required for casting molds are very simple and inexpensive. As a result, for production of a small lot, it is the ideal process.
5. There are certain parts made from metals and alloys that can only be processed this way.
6. Size and weight of the product is not a limitation for the casting process.

Limitations

1. Dimensional accuracy and surface finish of the castings made by sand casting processes are a limitation to this technique. Many new casting processes have been developed which can take into consideration the aspects of dimensional accuracy and surface finish. Some of these processes are die casting process, investment casting process, vacuum-sealed molding process, and shell molding process.
2. The metal casting process is a labor intensive process.

Components Used for making a Mould Cavity

The details can also be seen in the Fig. 2 below**:**

- Initially a suitable size of molding box for creating suitable wall thickness is selected for a two piece pattern. Sufficient care should also be taken in such that sense that the molding box must adjust mold cavity, riser and the gating system (sprue, runner and gates etc.).
- Next, place the drag portion of the pattern with the parting surface down on the bottom (ram-up) board as shown in Fig. 2 (a).
- The facing sand is then sprinkled carefully all around the pattern so that the pattern does not stick with molding sand during withdrawn of the pattern.
- The drag is then filled with loose prepared molding sand and ramming of the molding sand is done uniformly in the molding box around the pattern. Fill the molding sand once again and then perform ramming. Repeat the process three four times,
- The excess amount of sand is then removed using strike off bar to bring molding sand atthe same level of the molding flask height to completes the drag.
- The drag is then rolled over and the parting sand is sprinkled over on the top of the drag[Fig. 2(b)].
- Now the cope pattern is placed on the drag pattern and alignment is done using dowel pins.
- Then cope (flask) is placed over the rammed drag and the parting sand is sprinkled all around the cope pattern.
- Sprue and riser pins are placed in vertically position at suitable locations using support of molding sand. It will help to form suitable sized cavities for pouring molten metal etc. [Fig. 2 (c)].
- The gaggers in the cope are set at suitable locations if necessary. They should not be located too close to the pattern or mold cavity otherwise they may chill the casting and fill the cope with molding sand and ram uniformly.
- Strike off the excess sand from the top of the cope.
- Remove sprue and riser pins and create vent holes in the cope with a vent wire. The basic purpose of vent creating vent holes in cope is to permit the escape of gases generated during pouring and solidification of the casting.
- Sprinkle parting sand over the top of the cope surface and roll over the cope on the bottom board.
- Rap and remove both the cope and drag patterns and repair the mold suitably if needed and dressing is applied
- The gate is then cut connecting the lower base of sprue basin with runner and then the mold cavity.
- Apply mold coating with a swab and bake the mold in case of a dry sand mold.
- Set the cores in the mold, if needed and close the mold by inverting cope over drag.
- The cope is then clamped with drag and the mold is ready for pouring, [Fig. 2 (d)].

1. **Flask:** A metal or wood frame, without fixed top or bottom, in which the mold is formed. Depending upon the position of the flask in the molding structure, it is referred to by various names such as drag – lower molding flask, cope – upper molding flask, cheek – intermediate molding flask used in three piece molding.

2. **Pattern:** It is the replica of the final object to be made. The mold cavity is made with the help of pattern.

3. **Parting line:** This is the dividing line between the two molding flasks that makes up the mold.

4. **Molding sand:** Sand, which binds strongly without losing its permeability to air or gases. It is a mixture of silica sand, clay, and moisture in appropriate proportions.

5. **Facing sand:** The small amount of carbonaceous material sprinkled on the inner surfaceof the mold cavity to give a better surface finish to the castings.

6. **Core:** A separate part of the mold, made of sand and generally baked, which is used to create openings and various shaped cavities in the castings.

7. **Pouring basin:** A small funnel shaped cavity at the top of the mold into which the molten metal is poured.

8. **Sprue:** The passage through which the molten metal, from the pouring basin, reaches the mold cavity. In many cases it controls the flow of metal into the mold.

9. **Runner:** The channel through which the molten metal is carried from the sprue to thegate.

10. **Gate:** A channel through which the molten metal enters the mold cavity.

11. **Chaplets:** Chaplets are used to support the cores inside the mold cavity to take care of its own weight and overcome the metallostatic force.

12. **Riser**: A column of molten metal placed in the mold to feed the castings as it shrinks and solidities. Also known as "feed head".

13. **Vent:** Small opening in the mold to facilitate escape of air and gases.

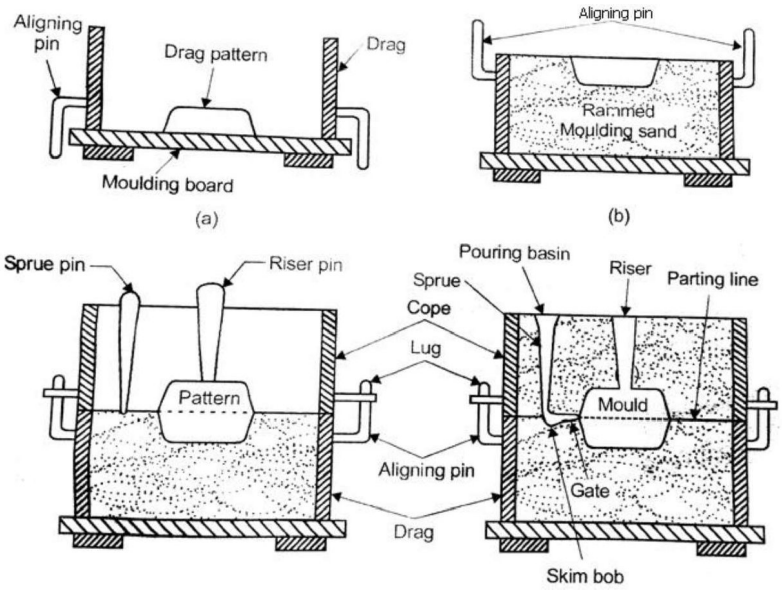

Fig. 2: Steps for making a mould cavity

PATTERN

A pattern is a model or the replica of the object (to be casted). It is embedded in molding sand and suitable ramming of molding sand around the pattern is made. The pattern is then withdrawn for generating cavity (known as mold) in molding sand. Thus it is a mould forming tool. Pattern can be said as a model or the replica of the object to be cast except for the various al1owances a pattern exactly resembles the casting to be made. It may be defined as a model or form around which sand is packed to give rise to a cavity known as mold cavity in which when molten metal is poured, the result is the cast object. When this mould/cavity is filled with molten metal, molten metal solidifies and produces a casting (product). So the pattern is the replica of the casting.

OBJECTIVES OF A PATTERN

1. Pattern prepares a mould cavity for the purpose of making a casting.
2. Pattern possesses core prints which produces seats in form of extra recess for core placementin the mould.
3. It establishes the parting line and parting surfaces in the mould.
4. Runner, gates and riser may form a part of the pattern.
5. Properly constructed patterns minimize overall cost of the casting.
6. Pattern may help in establishing locating pins on the mould and therefore on the casting witha purpose to check the casting dimensions.
7. Properly made pattern having finished and smooth surface reduce casting defects.

Patterns are generally made in pattern making shop. Proper construction of pattern and its material may reduce overal1 cost of the castings.

COMMON PATTERN MATERIALS

The common materials used for making patterns are wood, metal, plastic, plaster, wax or mercury. The some important pattern materials are discussed as under.

1. Wood

Wood is the most popular and commonly used material for pattern making. It is cheap, easily available in abundance, repairable and easily fabricated in various forms using resin and glues. It is very light and can produce highly smooth surface. Wood can preserve its surface by application of a shellac coating for longer life of the pattern. But, in spite of its above qualities, it is susceptible to shrinkage and warpage and its life is short because of the reasons that it is highly affected by moisture of the molding sand. After some use it warps and wears out quickly as it is having less resistance to sand abrasion.

It can not withstand rough handily andis weak in comparison to metal. In the light of above qualities, wooden patterns are preferred only when the numbers of castings to be produced are less. The main varieties of woods used in pattern-making are shisham, kail, deodar, teak and mahogany.

Shisham

It is dark brown in color having golden and dark brown stripes. It is very hard to work and blunts the cutting tool very soon during cutting. It is very strong and durable. Besides making pattern, it is also used for making good variety of furniture, tool handles, beds, cabinets, bridge piles, plywood etc.

Kail

It has too many knots. It is available in Himalayas and yields a close grained, moderately hard and durable wood. It can be very well painted. Besides making pattern, it is also utilized for making wooden doors, packing case, cheap furniture etc.

Deodar

It is white in color when soft but when hard, its color turns toward light yellow. It is strong and durable. It gives fragrance when smelled. It has some quantity of oil and therefore it is not easily attacked by insects. It is available in Himalayas at a height from 1500 to 3000 meters. It is used for making pattern, manufacturing of doors, furniture, patterns, railway sleepers etc. It is a soft wood having a close grain structure unlikely to warp. It is easily workable and its cost is also low. It is preferred for making pattern for production of small size castings in small quantities.

Teak Wood

It is hard, very costly and available in golden yellow or dark brown color. Special stripes on it add to its beauty. In India, it is found in M.P. It is very strong and durable and has wide applications. It can maintain good polish. Besides making pattern, it is used for making good quality furniture, plywood, ships etc. It is a straight-grained light wood. It is easily workable and has little tendency to warp. Its cost is moderate.

Mahogany

This is a hard and strong wood. Patterns made of this wood are more durable than those of above mentioned woods and they are less likely to warp. It has got a uniform straight grain structure and it can be easily fabricated in various shapes. It is costlier than teak and pine wood, It is generally not preferred for high accuracy for making complicated pattern. It is also preferred for production of small size castings in small quantities. The other Indian woods which may also be used for pattern making are deodar, walnllt, kail, maple, birch, cherry and shisham.

Advantages of wooden patterns

1. Wood can be easily worked.
2. It is light in weight.
3. It is easily available.
4. It is very cheap.
5. It is easy to join.
6. It is easy to obtain good surface finish.
7. Wooden laminated patterns are strong.
8. It can be easily repaired.

Disadvantages

1. It is susceptible to moisture.
2. It tends to warp.
3. It wears out quickly due to sand abrasion.
4. It is weaker than metallic patterns.

2. Metal

Metallic patterns are preferred when the number of castings required is large enough to justify their use. These patterns are not much affected by moisture as wooden pattern. The wear and tear of this pattern is very less and hence posses longer life. Moreover, metal is easier to shape the pattern with good precision, surface finish and intricacy in shapes. It can withstand against corrosion and handling for longer period. It possesses excellent strength to weight ratio. The main disadvantages of metallic patterns are higher cost, higher weight and tendency of rusting. It is preferred for production of castings in large quantities with same pattern. The metals commonly used for pattern making are

cast iron, brass and bronzes and aluminum alloys.

Cast Iron

It is cheaper, stronger, tough, and durable and can produce a smooth surface finish. It also possesses good resistance to sand abrasion. The drawbacks of cast iron patterns are that they are hard, heavy, brittle and get rusted easily in presence of moisture.

Advantages

1. It is cheap
2. It is easy to file and fit
3. It is strong
4. It has good resistance against sand abrasion
5. Good surface finish

Disadvantages

1. It is heavy
2. It is brittle and hence it can be easily broken
3. It may rust

Brasses and Bronzes

These are heavier and expensive than cast iron and hence are preferred for manufacturing small castings. They possess good strength, machinability and resistance to corrosion and wear. They can produce a better surface finish. Brass and bronze pattern is finding application in making match plate pattern

Advantages

1. Better surface finish than cast iron.
2. Very thin sections can be easily casted.

Disadvantages

1. It is costly
2. It is heavier than cast iron.

Aluminum Alloys

Aluminum alloy patterns are more popular and best among all the metallic patterns because of their high light ness, good surface finish, low melting point and good strength. They also possesses good resistance to corrosion and abrasion by sand and there by enhancing longer life of pattern. These materials do not withstand against rough handling. These have poor repair ability and are preferred for making large castings.

Advantages

1. Aluminum alloys pattern does not rust.
2. They are easy to cast.
3. They are light in weight.
4. They can be easily machined.

Disadvantages

1. They can be damaged by sharp edges.
2. They are softer than brass and cast iron.
3. Their storing and transportation needs proper care.

White Metal (Alloy of Antimony, Copper and Lead)

Advantages

1. It is best material for lining and stripping plates.
2. It has low melting point around 260°C
3. It can be cast into narrow cavities.

Disadvantages

1. It is too soft.
2. Its storing and transportation needs proper care
3. It wears away by sand or sharp edges.

3. Plastic

Plastics are getting more popularity now a days because the patterns made of these materials are lighter, stronger, moisture and wear resistant, non sticky to molding sand, durable and they are not affected by the moisture of the molding sand. Moreover they impart very smooth surface finish on the pattern surface. These materials are somewhat fragile, less resistant to sudden loading and their section may need metal reinforcement. The plastics used for this purpose are thermosetting resins. Phenolic resin plastics are commonly used. These are originally in liquid form and get solidified when heated to a specified temperature. To prepare a plastic pattern, a mould in two halves is prepared in plaster of paris with the help of a wooden pattern known as a master pattern. The phenolic resin is poured into the mould and the mould is subjected to heat. The resin solidifies giving the plastic pattern. Recently a new material has stepped into the field of plastic which is known as foam plastic. Foam plastic is now being produced in several forms and the most common is the expandable polystyrene plastic category. It is made from benzene and ethyl benzene.

4. Plaster

This material belongs to gypsum family which can be easily cast and worked with wooden tools and preferable for producing highly intricate casting. The main advantages of plaster are that it has high compressive strength and is of high expansion setting type which compensate for the shrinkage allowance of the casting metal. Plaster of paris pattern can be prepared either by directly pouring the slurry of plaster and water in moulds prepared earlier from a master pattern or by sweeping it into desired shape or form by the sweep and strickle method. It is also preferred for production of small size intricate castings and making core boxes.

5. Wax

Patterns made from wax are excellent for investment casting process. The materials used are blends of several types of waxes, and other additives which act as polymerizing agents, stabilizers, etc. The commonly used waxes are paraffin wax, shellac wax, bees-wax, cerasin wax, and micro-crystalline wax. The properties desired in a good wax pattern include low ash content up to 0.05 per cent, resistant to the primary coat material used for investment, high tensile strength and hardness, and substantial weld strength. The general practice of making wax pattern is to inject liquid or semi-liquid wax into a split die. Solid injection is also used to avoid shrinkage and for better strength. Waxes use helps in imparting a high degree of surface finish and dimensional accuracy castings. Wax patterns are prepared by pouring heated wax into split moulds or a pair of dies. The dies after having been cooled down are parted off. Now the wax pattern is taken out and used for molding. Such patterns need not to be drawn out solid from the mould. After the mould is ready, the wax is poured out by heating the mould and keeping it upside down. Such patterns are generally used in the process of investment casting where accuracy is linked with intricacy of the cast object.

Advantages of wooden patterns

1. Wood can be easily worked.
2. It is light in weight.
3. It is easily available.
4. It is very cheap.
5. It is easy to join.
6. It is easy to obtain good surface finish.
7. Wooden laminated patterns are strong.
8. It can be easily repaired.

Disadvantages

5. It is susceptible to moisture.
6. It tends to warp.
7. It wears out quickly due to sand abrasion.
8. It is weaker than metallic patterns.

TYPES OF PATTERN

The types of the pattern and the description of each are given as under.

1. One piece or solid pattern
2. Two piece or split pattern
3. Cope and drag pattern
4. Three-piece or multi- piece pattern
5. Loose piece pattern
6. Match plate pattern
7. Follow board pattern
8. Gated pattern
9. Sweep pattern
10. Skeleton pattern
11. Segmental or part pattern

Single-piece or solid pattern

Solid pattern is made of single piece without joints, partings lines or loose pieces. It is the simplest form of the pattern. Typical single piece pattern is shown in **Fig. 3**.

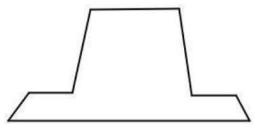

Fig. 3: Single piece pattern

Two-piece or split pattern

When solid pattern is difficult forwithdrawal from the mold cavity, then solid pattern is splited in two parts. Split pattern is made in two pieces which are joined at the parting line by means of dowel pins. The splitting at the parting line is done to facilitate the withdrawal of the pattern. A typical example is shown in **Fig. 4.**

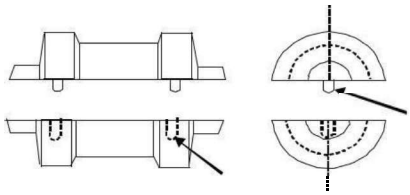

Fig. 4: Two-piece or split pattern

Cope and drag pattern

In this case, cope and drag part of the mould are prepared separately. This is done when the completemould is too heavy to be handled by one operator. The pattern is made up of two halves, which are mounted on different plates. A typical example of match plate pattern is shown in **Fig. 5.**

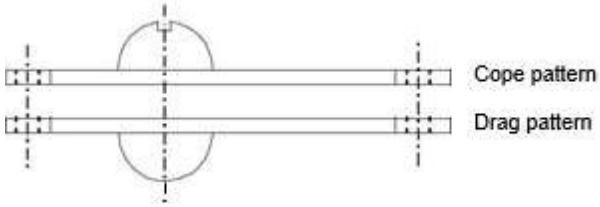

Fig. 5: Cope and drag pattern

Three-piece or multi-piece pattern

Some patterns are of complicated kind in shape and hence cannot be made in one or two pieces because of difficulty in withdrawing the pattern. Therefore these patterns are made in either three pieces or in multi- pieces. Multi molding flasks are needed to make mold from these patterns. The pattern can also be seen from the **Fig. 6.**

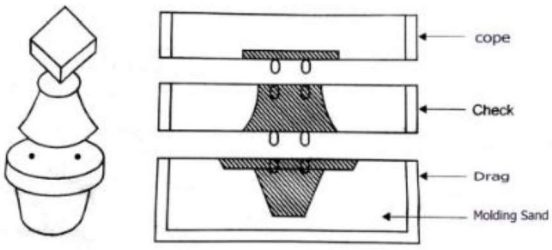

Fig. 6: Three-piece or multi-piece pattern

Loose-piece pattern

A single piece are made to have loose piece in easy to allow withdrawal from the mold the molding process are completed, after the main pattern is withdrawn leaving from that piece in the sand. After the withdrawal of piece from mold, it cavity separately formed by the pattern. It loose piece pattern is highly skilled job and expensive. The pattern can also be seen from the **Fig. 7.**

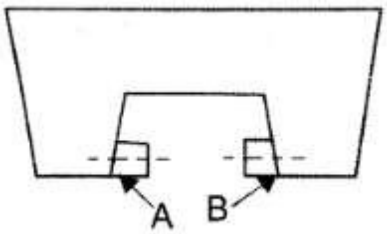

Fig. 7: Loose-piece pattern

Match plate pattern

The match plate pattern types is having two parts, one for one side and another one for another side of pattern. It is called match plate pattern. The sand casting pattern making in two pieces. It also having gates and runner attached with pattern. The molding process completed after that match plate

removed together, the gating is obtained for joining the cope and drag. It pattern is mainly used for casting of metal, usually aluminum are machined in this method with light weight and machinability. It should be possible for mass production of small casting with high dimensional accuracy. They are also used for machine molding. The cost will be high of molding but it is easily compensated by high rate of production and more accuracy. The pattern can also be seen from the **Fig. 8.**

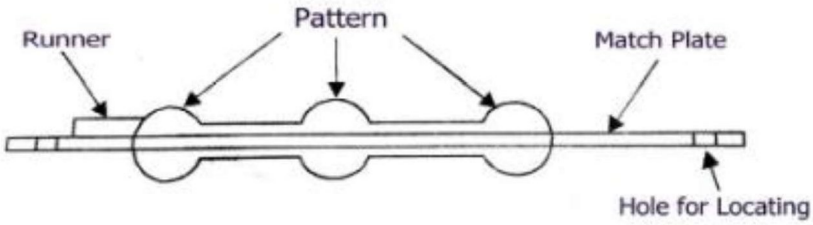

Fig. 8: Match plate pattern

Follow board type pattern

In casting process some portions are structurally weak. It is not supported properly and may be break under the force of ramming. In this stage the special pattern to allow the mold may be such as wooden material. The pattern can also be seen from the **Fig. 9.**

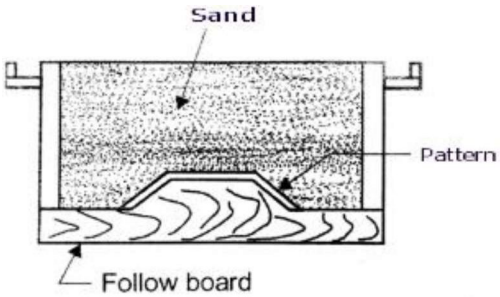

Fig. 9: Follow board type pattern

Gated Pattern

In the mass production of casings, multi cavity moulds are used. Such moulds are formed by joining a number of patterns and gates and providing a common runner for the molten metal, as shown in **Fig. 10.** These patterns are made of metals, and metallic pieces to form gates and runners are attached to the pattern.

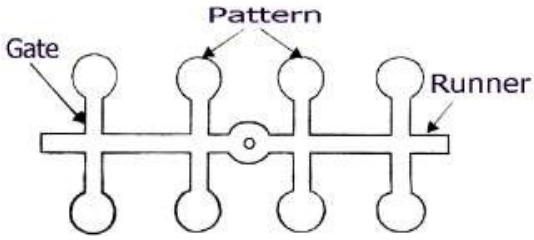

Fig. 10: Gated Pattern

Sweep Pattern

Sweep patterns are used for forming large circular moulds of symmetric kind by revolving a sweep attached to a spindle as shown in **Fig. 11.** Actually a sweep is a template of wood or metal and is attached to the spindle at one edge and the other edge has a contour depending upon the desired shape of the mould. The pivot end is attached to a stake of metal in the center of the mould.

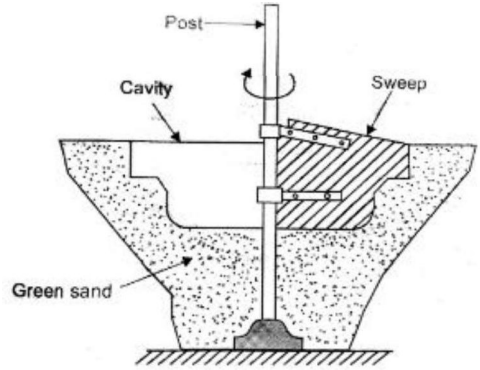

Fig. 11: Sweep Pattern

Skeleton Pattern

When only a small number of large and heavy castings are to be made, it is not economical to make a solid pattern. In such cases, however, a skeleton pattern may be used. This is a ribbed construction of wood which forms an outline of the pattern to be made. This frame work is filled with loam sand and rammed. The surplus sand is removed by strickle board. For round shapes, the pattern is made in two halves which are joined with glue or by means of screws etc. A typical skeleton pattern is shown in **Fig. 12.**

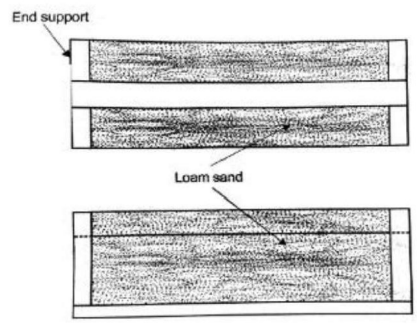

Fig. 12: Skeleton Pattern

Segmental pattern

The segmental pattern is used to prepare the mold of larger circular casting to avoid the use of solid pattern of exact size. It is similar to sweep pattern, but the difference from Sweep pattern, the sweep pattern is give a continuous revolve motion to generate the part, the segmental pattern itself and mold is prepared. In this segmental pattern construction should be save the material for pattern make and easy carried. The segmental pattern is mounted on the central pivot and mold in one position for after prepare of mold the segment is moved for next position. That is repeat together the complete mold is done. A typical segmental pattern is shown in **Fig. 13.**

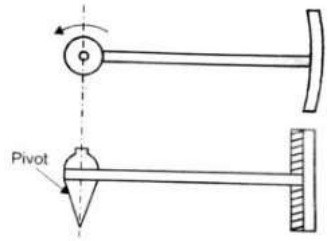

Fig. 13: Segmental pattern

Pattern Allowances

Pattern may be made from wood or metal and its color may not be same as that of the casting. The material of the pattern is not necessarily same as that of the casting. Pattern carries an additional allowance to compensate for metal shrinkage. It carries additional allowance for machining. It carries the necessary draft to enable its easy removal from the sand mass. It carries distortions allowance also. Due to distortion allowance, the shape of casting is opposite to pattern. Pattern may carry additional projections, called core prints to produce seats or extra recess in mold for setting or adjustment or location for cores in mold cavity. It may be in pieces (more than one piece) whereas casting is in one piece. Sharp changes are not provided on the patterns. These are provided on the casting with the help of machining. Surface finish may not be same as that of casting.

The size of a pattern is never kept the same as that of the desired casting because of the fact that during cooling the casting is subjected to various effects and hence to compensate for these effects, corresponding allowances are given in the pattern. These various allowances given to pattern can be enumerated as, allowance for shrinkage, allowance for machining, allowance for draft, allowance for rapping or shake, allowance for distortion and allowance for mould wall movement. These allowances are discussed as under.

Shrinkage Allowance

In practice it is found that all common cast metals shrink a significant amount when they are cooled from the molten state. The total contraction in volume is divided into the following parts:

1. Liquid contraction, i.e. the contraction during the period in which the temperature of the liquid metal or alloy falls from the pouring temperature to the liquidus temperature.
2. Contraction on cooling from the liquidus to the solidus temperature, i.e. solidifying contraction.
3. Contraction that results there after until the temperature reaches the room temperature. Thisis known as solid contraction.

The first two of the above are taken care of by proper gating and risering. Only the last one, i.e. the solid contraction is taken care by the pattern makers by giving a positive shrinkage allowance. This contraction allowance is different for different metals. The contraction allowances for different metals and alloys such as Cast Iron 10 mm/mt.. Brass 16 mm/mt., Aluminium Alloys. 15 mm/mt., Steel 21 mm/mt., Lead 24 mm/mt. In fact, there is a special rule known as the pattern marks contraction rule in which the shrinkage of the casting metals is added. It is similar in shape as that of a common rule but is slightly bigger than the latter depending upon the metal for which it is intended. A typical shrinkage allowance can be shown in the **Fig. 14.**

Fig. 14: Shrinkage Allowance

Machining Allowance

It is a positive allowance given to compensate for the amount of material that is lost in machining or finishing the casting. If this allowance is not given, the casting will become undersize after machining.

The amount of this allowance depends on the size of casting, methods of machining and the degree of finish. In general, however, the value varies from 3 mm. to 18 mm. A typical machining allowance can be shown in the **Fig. 15.**

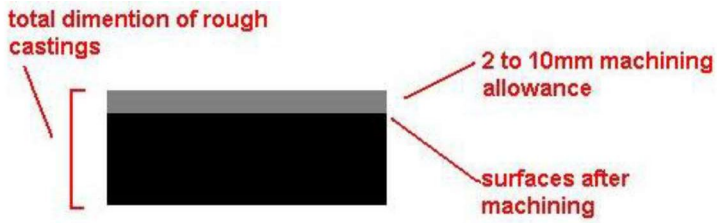

Fig. 15: Machining Allowance

Draft or Taper Allowance

Taper allowance (Fig. 1.1.11) is also a positive allowance and is given on all the vertical surfaces of pattern so that its withdrawal becomes easier. The normal amount of taper on the external surfaces varies from 10 mm to 20 mm/mt. On interior holes and recesses which are smaller in size, the taper should be around 60 mm/mt. These values are greatly affected by the size of the pattern and the molding method. In machine molding its, value varies from 10 mm to 50 mm/mt. A typical taper allowance can be shown in the **Fig. 16.**

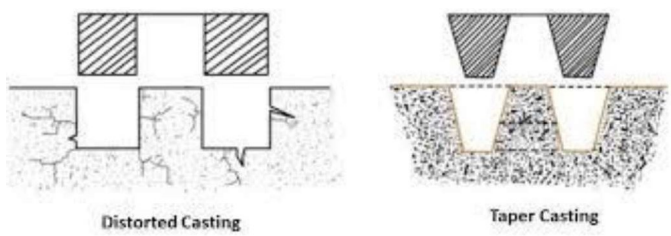

Fig. 16: Machining Allowance

Rapping or Shake Allowance

Before withdrawing the pattern it is rapped and thereby the size of the mould cavity increases. Actually by rapping, the external sections move outwards increasing the size and internal sections move inwards decreasing the size. This movement may be insignificant in the case of small and medium size castings, but it is significant in the case of large castings. This allowance is kept negative and hence the pattern is made slightly smaller in dimensions 0.5-1.0 mm.

Distortion Allowance

This allowance is applied to the castings which have the tendency to distort during cooling due to thermal stresses developed. For example a casting in the form of U shape will contract at the closed end on cooling, while the open end will remain fixed in position. Therefore, to avoid the distortion, the legs of U pattern must converge slightly so that the sides will remain parallel after cooling.

Mold wall Movement Allowance

Mold wall movement in sand moulds occurs as a result of heat and static pressure on the surface layer of sand at the mold metal interface. In ferrous castings, it is also due to expansion due to graphitisation. This enlargement in the mold cavity depends upon the mold density and mould composition. This effect becomes more pronounced with increase in moisture content and temperature.

Gating System

Gating system refers to all those elements which are connected with the flow of molten metal from the ladle to the mould cavity. The various elements that are connected with the gating system are: Pouring Basin

- **Sprue**
- **Sprue- base**
- **Well**
  Runner
- **Runner**
- **Extension In-gate**
- **Riser**

Pouring Basin: In order to avoid mould erosion, molten metal is poured into a pouring basin, which acts as a reservoir from which it moves smoothly into the sprue. The pouring basin is also able to stop the slag from entering the mould cavity by means of a skimmer or skim core.

Sprue: It is the channel through which the molten metal is brought into the parting plane, where it enters the runners and gates to ultimately reach the mould cavity. If the sprue were to be straight-cylindrical then the meatl flow would not be full at the bottom to avoid this problem the sprue is designed tapper.

Sprue Base Well: This is a reservoir for metal at the bottom of the sprue, to reduce the momentum of the molten metal.

Runner: The runner takes the molten metal from sprue to the casting. Ingate: This is the final stage where the molten metal moves from the runner to the mold cavity.

Riser: Riser is a source of extra metal which flows from riser to mold cavity to compensate for shrinkage which takes place in the casting when it starts solidifying. Without a riser heavier parts of the casting will have shrinkage defects, either on the surface or internally.

Types of Gating Systems:

The gating system also depends on the direction of the parting plane, which contains the sprue, runner and the ingate. They are as follows:

Horizontal Gating System : This is used most widely. This type is normally applied in ferrous metal's sand casting and gravity die-casting of non-ferrous metals. They are used for flat casting, which are filled under gravity.

Vertical Gating System : This is applied in tall castings were high-pressure sand mold, shell mold and die-casting processes are done. Top Gating System : this is applied in places where the hot metal is poured form the top of the casting. It helps directional solidification of the casting from top to bottom. It suits only flat castings to limit the damage of the metal during the initial filling.

Bottom Gating System : it is used in tall castings where the molten metal enters the casting through the bottom.

Middle Gating System : It has the characteristics of both the top and bottom.

Physical Properties of Various Materials at Room Temperature

Material	Density (kg/m³)	Melting point (°C)	Specific heat (J/kg K)	Thermal conductivity (W/m K)	Coefficient of thermal expansion (μm/m°C)
Metallic					
Aluminum	2700	660	900	222	23.6
Aluminum alloys	2630–2820	476–654	880–920	121–239	23.0–23.6
Beryllium	1854	1278	1884	146	8.5
Columbium (niobium)	8580	2468	272	52	7.1
Copper	8970	1082	385	393	16.5
Copper alloys	7470–8940	885–1260	337–435	29–234	16.5–20
Gold	19300	1063	129	317	19.3
Iron	7860	1537	460	74	11.5
Steels	6920–9130	1371–1532	448–502	15–52	11.7–17.3
Lead	11350	327	130	35	29.4
Lead alloys	8850–11350	182–326	126–188	24–46	27.1–31.1
Magnesium	1745	650	1025	154	26.0
Magnesium alloys	1770–1780	610–621	1046	75–138	26.0
Molybdenum alloys	10210	2610	276	142	5.1
Nickel	8910	1453	440	92	13.3
Nickel alloys	7750–8850	1110–1454	381–544	12–63	12.7–18.4
Silicon	2330	1423	712	148	7.63
Silver	10500	961	235	429	19.3
Tantalum alloys	16600	2996	142	54	6.5
Titanium	4510	1668	519	17	8.35
Titanium alloys	4430–4700	1549–1649	502–544	8–12	8.1–9.5
Tungsten	19290	3410	138	166	4.5
Nonmetallic					
Ceramics	2300–5500	–	750–950	10–17	5.5–13.5
Glasses	2400–2700	580–1540	500–850	0.6–1.7	4.6–70
Graphite	1900–2200	–	840	5–10	7.86
Plastics	900–2000	110–330	1000–2000	0.1–0.4	72–200
Wood	400–700	–	2400–2800	0.1–0.4	2–60

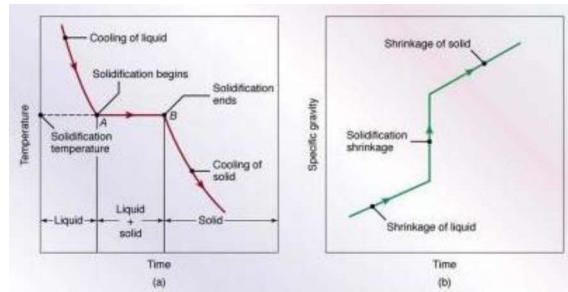

Fig. 17: Temperature as a function of time for the solidification of pure metals. Note that the freezing takes place at a constant temperature. (b) Density as a function of time.

In order to provide defect-free casting the gating system should make certain provisions while designing the gating system.

1. The mould should be completely filled in the smallest time possible without having to raise the metal temperature or use high metal heads.
2. The metal should flow smoothly into the mould without any turbulence. A turbulence metal flow tends to form dross in the mould.
3. Unwanted material such as slag, dross and other mould material should not be allowed to enter the mould cavity
4. The metal entry into the mould cavity should be properly controlled in such a way that aspiration of the atmospheric air is prevented.
5. A proper thermal gradient be maintained so that the casting is cooled without any shrinkage cavities or distortions.
6. Metal flow should be maintained in such a way that no gating or mould erosion takes place.
7. The gating system should ensure that enough molten metal reaches the mould cavity
8. The gating system design should be economical and easy to implement and remove after casting solidification.
9. Ultimately, the casting yield should be maximized.

Solidification of Metals

After pouring molten metal into a mold, a series of events takes place during the solidification of the metal and cooling to room temperature. These events greatly influence the size, shape uniformity, and chemical composition of the grains formed throughout the casting, which in turn influence its over all properties.

Solidification of Pure Metals: A pure metal solidifies at a constant temperature. It has a clearly defined melting (or freezing) point (see table above and **Fig. 17**). After the temperature of the molten metal drops to its freezing point, its temperature remains constant while the latent heat of fusion is given off. The solidification front (solid-liquid interface) moves through the molten metal, solidifying from the mold walls in toward the center.

The grain structure of a pure metal cast in a square mold is shown in Fig. 17 a: 9At the mold walls (usually at room temp), the metal cools rapidly and produces a solidified skin (or shell) of fine

equiaxed grains (approx. equal dims. in all dirs.) 9The grains grow in a direction opposite to that of the heat transfer out through the mold. Those grains that have favorable orientations grow preferentially away from the surface of the mold producing columnar grains (Fig. 10.3). 9As the driving force of the heat transfer is reduced away from the mold walls, the grains become equiaxed and coarse. Those grains that have substantially different orientations are blocked from further growth. Such grains development is known as homogeneous nucleation, meaning that the grains grow upon themselves, starting at the mold wall.

When the heat is abstracted rapidly, however, solidification it leads to fine structures due to a decrease in diffusion rates.

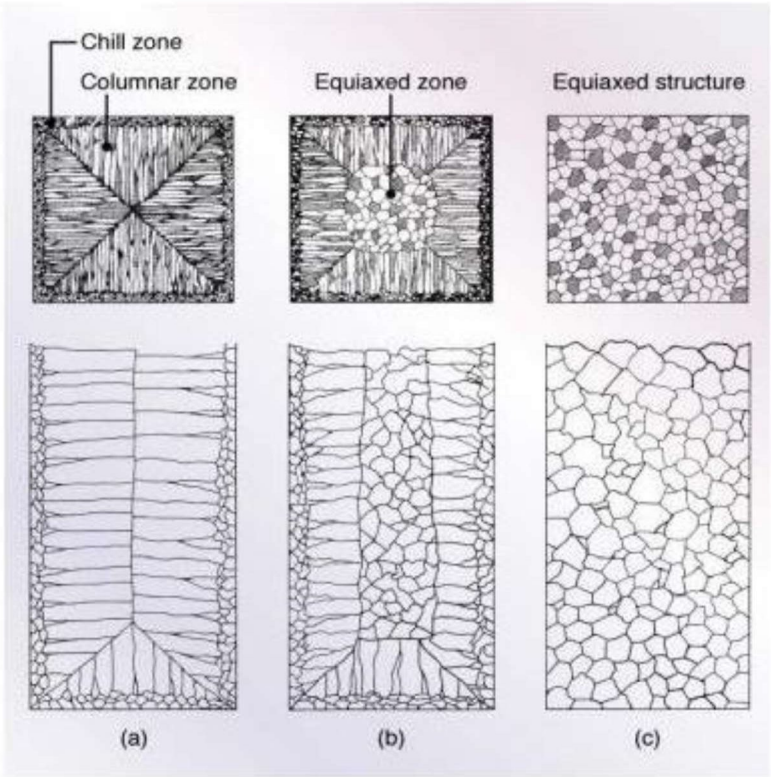

Fig. 18: Schematic illustration of three cast structures of metals solidified in a square mold: (a) Pure metals (b) Solid-solutions alloys and (C) Structure obtained by using nucleating agents.

Solidification of Alloys

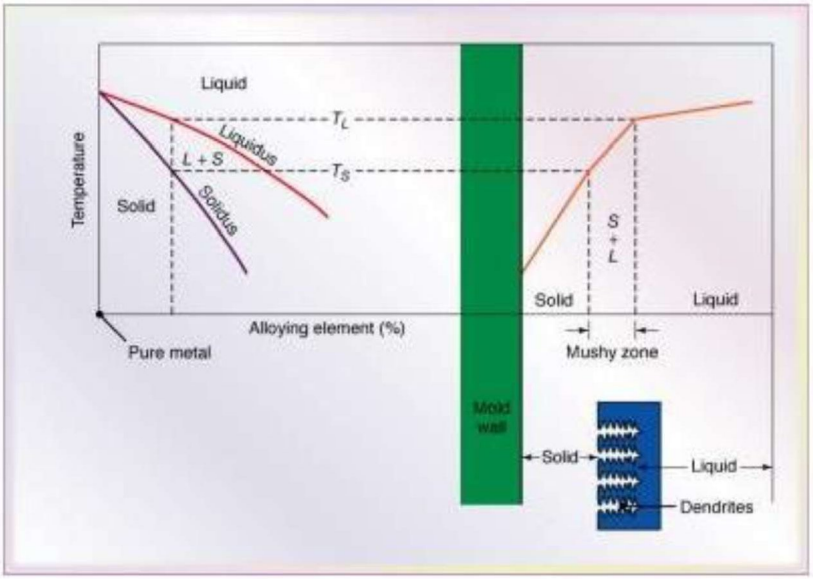

Fig. 19: Schematic illustration of alloy solidification and temperature distribution in the solidifying metal. Note the formation of dendrites in the mushy zone.

Solidification begins when the temperature drops below the liquidus, TL, and is complete when it reaches the solidus, TS (Fig.19). Within this temperature range, the alloy is in a mushy or pasty state with columnar dendrites (close to tree). Note the liquid metal present between the dendrite arms.

Dendrites have 3-D arms and branches (secondary arms) which eventually interlock, as can be seen in Fig.20.
(L & S) is an important factor during solidification. It is described by the freezing range as: 5
Freezing range = TL - TS (Fig. 17) .

It can be seen in Figure 10.1 that pure metals have no freezing range, and that the solidification front moves as a plane front without forming a mushy zone. In alloys with a nearly symmetrical phase diagram, the structure is generally lamellar, with two or more solid phases present, depending on the alloy system. When the volume fraction of the minor phase of the alloy is less than about 25%, the structure generally becomes fibrous. These conditions are particularly important for cast irons. For alloys, a short freezing range generally involves a temperature difference < 50o C, and a long freezing range > 110o C.

Ferrous castings generally have narrow mushy zones, whereas aluminum and magnesium alloys have wide mushy zones.

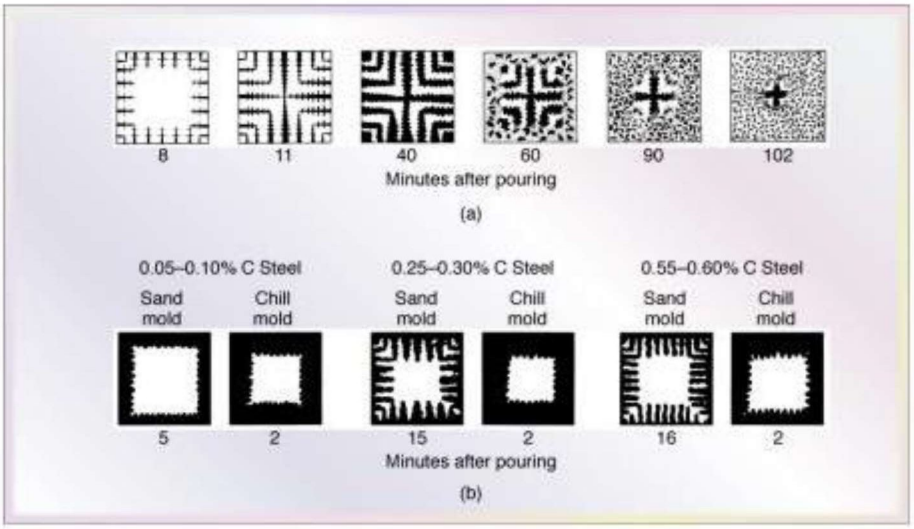

Fig. 20: (a) Solidification patterns for grey cast iron in a 180mm square casting. Note that after 11 minutes of cooling, dendrites reach each other, but the casting is still mushy throughout. It takes about two hours for this casting to solidify completely. (b)Solidification of carbon steels in sand and chill (metal) molds. Note the difference in solidification patterns as the carbon content increases.

Riser

Riser is a source of extra metal which flows from riser to mold cavity to compensate for shrinkage which takes place in the casting when it starts solidifying. Without a riser heavier parts of the casting will have shrinkage defects, either on the surface or internally.
Risers are known by different names as metal reservoir, feeders, or headers. Shrinkage in a mold, from the time of pouring to final casting, occurs in three stages.

1. during the liquid state
2. during the transformation from liquid to solid
3. during the solid state

First type of shrinkage is being compensated by the feeders or the gating system. For the second type of shrinkage risers are required. Risers are normally placed at that portion of the casting which

is last to freeze. A riser must stay in liquid state at least as long as the casting and must be able to feed the casting during this time.

Functions of Risers

- Provide extra metal to compensate for the volumetric shrinkage
- Allow mold gases to escape
- Provide extra metal pressure on the solidifying mold to reproduce mold details more exact

Design Requirements of Risers

1. Riser size: For a sound casting riser must be last to freeze. The ratio of (volume / surface area)^2 of the riser must be greater than that of the casting. However, when this condition does not meet the metal in the riser can be kept in liquid state by heating it externally or using exothermic materials in the risers.
2. Riser placement: the spacing of risers in the casting must be considered by effectively calculating the feeding distance of the risers.
3. Riser shape: cylindrical risers are recommended for most of the castings as spherical risers, although considers as best, are difficult to cast. To increase volume/surface area ratio the bottom of the riser can be shaped as hemisphere.

Riser Design

The riser is a reservoir in the mold that serves as a source of liquid metal for the casting to compensate for shrinkage during solidification. The riser must be designed to freeze after the main casting in order to satisfy its function Riser Function As described earlier, a riser is used in a sand-casting mold to feed liquid metal to the casting during freezing in order to compensate for solidification shrinkage. To function, the riser must remain molten until after the casting solidifies. Chvorinov's rule can be used to compute the size of a riser that will satisfy this requirement. The following example illustrates the calculation. The riser represents waste metal that will be separated from the cast part and re-melted to make subsequent castings. It is desirable for the volume of metal in the riser to be a minimum. Since the geometry of the riser is normally selected to maximize the V/A ratio, this tends to reduce the riser volume as much as possible Risers can be designed in different forms. The design shown in Figure below is a side riser. It is attached to the side of the casting by means of a small channel. A top riser is one that is connected to the top surface of the casting. Risers can be open or blind. An open riser is exposed to the outside at the top surface of the cope. This has the disadvantage of allowing more heat to escape, promoting faster solidification. A blind riser is entirely enclosed within the mold, as in Figure below.

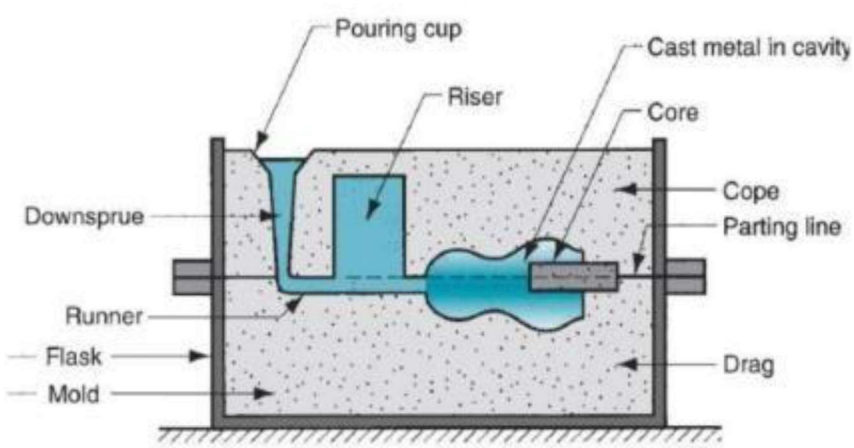

(b)

This process was patent in 20 century to make higher standards hollow castings. The first centrifugal

casting machine was invented by a British, A.G. Eckhardt in 1807. This process is widely used for casting hollow pipes, tubes and other symmetrical parts.

Core and Core Box:

Cores are compact mass of core sand that when placed in mould cavity at required location with proper alignment does not allow the molten metal to occupy space for solidification in that portion and hence help to produce hollowness in the casting. The environment in which the core is placed is much different from that of the mold. In fact the core (Fig. 22) has to withstand the severe action of hot metal which completely surrounds it. Cores are classified according to shape and position in the mold. There are various types of cores such as horizontal core, vertical core, balanced core, drop core and hanging core are shown in the Fig. 22 below.

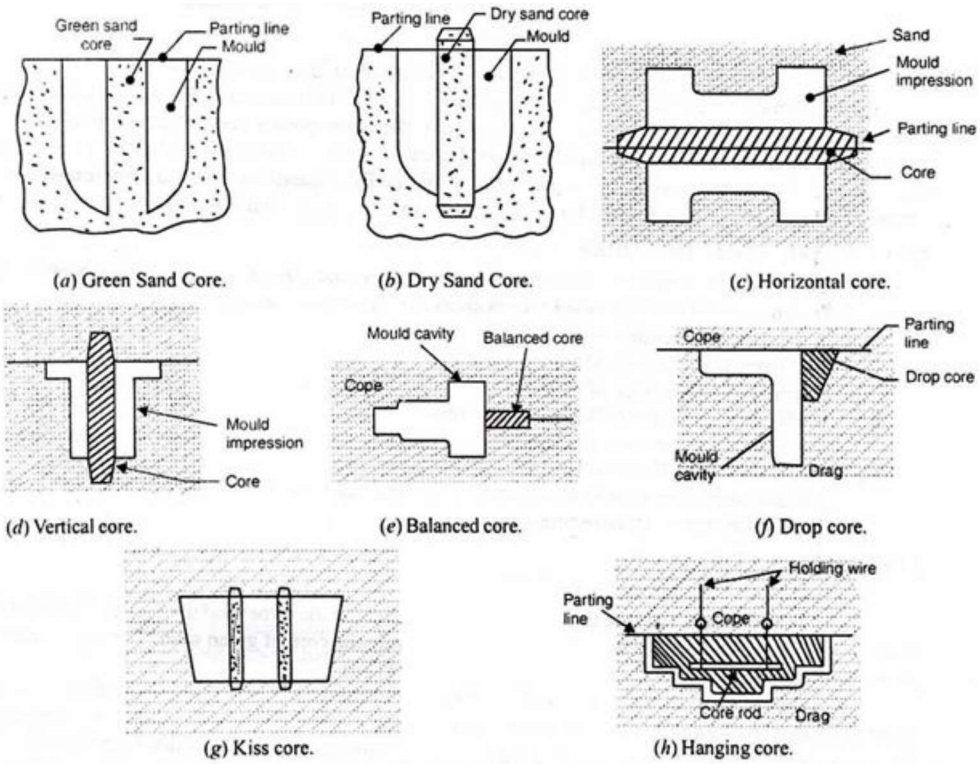

Fig. 22: Types of Core

There are various functions of cores which are given below
Core is used to produce hollowness in castings in form of internal cavities.

It may form a part of green sand mold

1. It may be deployed to improve mold surface.
2. It may provide external undercut features in casting.
3. It may be used to strengthen the mold.
4. It may be used to form gating system of large size mold
5. It may be inserted to achieve deep recesses in the casting

Special Casting processes:

This process was patent in 20 century to make higher standards hollow castings. The first centrifugal casting machine was invented by a British, A.G. Eckhardt in 1807. This process is widely used for casting hollow pipes, tubes and other symmetrical parts.

Centrifugal Casting:

Working Principle: It works on basic principle of centrifugal force on a rotating Component. In this process, a mould is rotated about its central axis when the molten metal is poured into it. A centrifugal force acts on molten metal due to this rotation, which forces the metal at outer wall of mould. The mould rotates until the whole casting solidifies. The slag oxide and other inclusion being lighter, gets separated from metal and segregate towards the center.

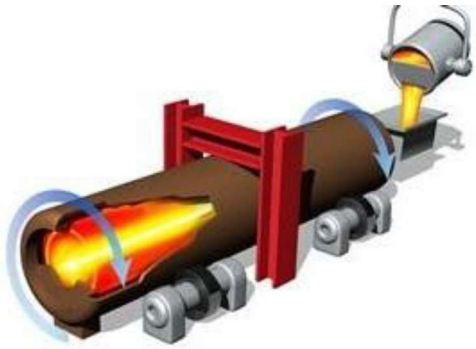

Types
True Centrifugal Casting:

True centrifugal casting is sometime known as centrifugal casting is a process of making symmetrical round hollow sections. This process uses no **cores** and the symmetrical hollow section is created by pure centrifugal action. In this process, the mould rotates about horizontal or vertical axis. Mostly the mould is rotated about horizontal axis and the molten metal introduce from an external source. The centrifugal force acts on the molten metal which forces it at the outer wall of mould. The mould rotates until the whole casting solidifies. The slag particles are lighter than metal thus separated at the central part of the casting and removed by machining or other suitable process. This process

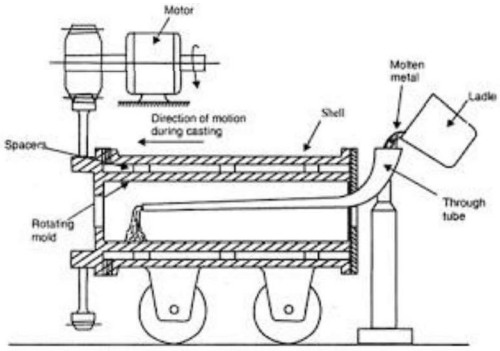

used to make hollow pipes, tubes, hollow bushes etc. which are axi symmetrical with a concentric hole.

Semi Centrifugal Casting:

This process is used to cast large size axi symmetrical object. In this process mould is placed horizontally and rotated along the vertical axis. A core is inserted at the center which is used to cast hollow section. When the mould rotates, the outer portion of the mould fill by purely centrifugal action and as the liquid metal approaches toward the center, the centrifugal component decreases

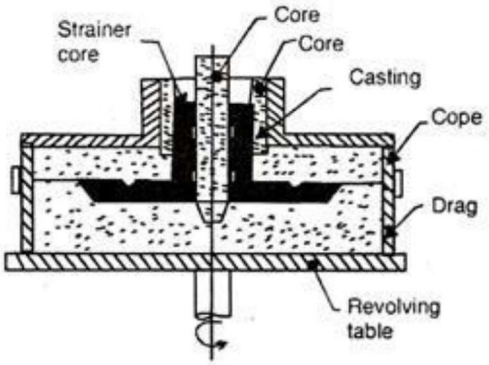

and gravity component increase. Thus a core is inserted at center to make hollow cavity at the center without centrifugal force. In this process centrifugal force is used for uniform filling of axi symmetrical parts. Gear blanks, flywheel etc. are made by this process.

Centrifuging:

In this process there are several mould cavities connected with a central sprue with radial gates. This process uses higher metal pressure during solidification. It is used to cast shapes which are not axi symmetrical. This is only suitable for small objects.

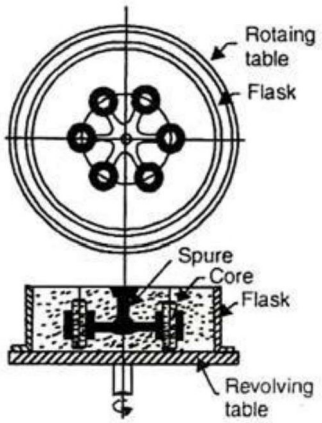

Application:

- It is widely used in aircraft industries to cast rings, flanges and compressor casting.
- It is used for cast Steam turbine bearing shell.
- Roller for steel rolling mill is another example of centrifugal casting.
- It is used in automobile industries to cast gear blank, cylindrical liners, piston rings etc.
- It is used to cast bearings.
- This process used to cast switch gear components used in electronic industries.

Advantages and Disadvantages:

- It provides dense metal and high mechanical properties.
- Unidirectional solidification can obtain up to a certain thickness.
- It can use for mass production.
- No cores are required for cast hollow shapes like tubes etc.
- Gating system and runner are totally eliminated.

- All the impurity like oxide or other slag particles, segregated at center from where it can easily remove.
- It required lower pouring temperature thus save energy.
- Lower casting defects due to uniform solidification. Disadvantages:
- Limited design can be cast. It can cast only symmetrical shapes.
- High equipment or setup cost.
- It is not suitable for every metal.
- Higher maintenance required.
- High skill operator required.
- In this casting process, solidification time and temperature distribution is difficult to determine.

Investment Casting Process

The root of the investment casting process, the cire perdue or "lost wax" method dates back to at least the fourth millennium B.C. The artists and sculptors of ancient Egypt and Mesopotamia used the rudiments of the investment casting process to create intricately detailed jewelry, pectorals and idols. The investment casting process alos called lost wax process begins with the production of wax replicas or patterns of the desired shape of the castings. A pattern is needed for every casting to be produced. The patterns are prepared by injecting wax or polystyrene in a metal dies. A number of patterns are attached to a central wax sprue to form a assembly. The mold is prepared by surrounding the pattern with refractory slurry that can set at room temperature. The mold is then heated so that pattern melts and flows out, leaving a clean cavity behind. The mould is further hardened by heating and the molten metal is poured while it is still hot. When the casting is solidified, the mold is broken and the casting taken out.

The basic steps of the investment casting process are (Figure 11) :

1. Production of heat-disposable wax, plastic, or polystyrene patterns
2. Assembly of these patterns onto a gating system
3. "Investing," or covering the pattern assembly with refractory slurry
4. Melting the pattern assembly to remove the pattern material
5. Firing the mold to remove the last traces of the pattern material
6. Pouring
7. Knockout, cutoff and finishing.

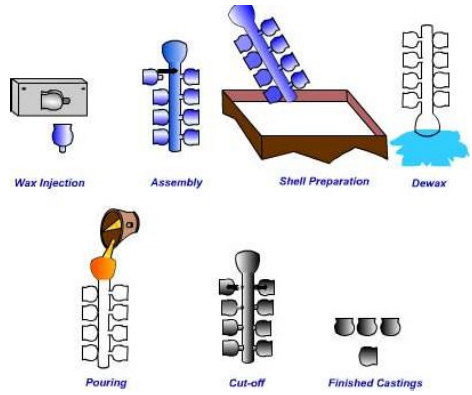

The basic Steps of Investment Casting

Advantages

- Formation of hollow interiors in cylinders without cores
- Less material required for gate
- Fine grained structure at the outer surface of the casting free of gas and shrinkage cavities and porosity

Disadvantages

- More segregation of alloy component during pouring under the forces of rotation
- Contamination of internal surface of castings with non-metallic inclusions
- Inaccurate internal diameter

Ceramic Shell Investment Casting Process

The basic difference in investment casting is that in the investment casting the wax pattern is immersed in a refractory aggregate before dewaxing whereas, in ceramic shell investment casting a ceramic shell is built around a tree assembly by repeatedly dipping a pattern into a slurry (refractory material such as zircon with binder). After each dipping and stuccoing is completed, the assembly is allowed to thoroughly dry before the next coating is applied. Thus, a shell is built up around the assembly. The thickness of this shell is dependent on the size of the castings and temperature of the metal to be poured.

After the ceramic shell is completed, the entire assembly is placed into an autoclave or flash fire furnace at a high temperature. The shell is heated to about 982 o C to burn out any residual wax and to develop a high-temperature bond in the shell. The shell molds can then be stored for future use or molten metal can be poured into them immediately. If the shell molds are stored, they have to be preheated before molten metal is poured into them.

Advantages

- excellent surface finish
- tight dimensional tolerances
- machining can be reduced or completely eliminated

The Process

The Mold: Like in all permanent mold manufacturing processes, the first step in die casting is the production of the mold. The mold must be accurately created as two halves that can be opened and closed for removal of the metal casting, similar to the basic permanent mold casting process. The mold for die casting is commonly machined from steel and contains all the components of the gating system. *Multi-cavity die* are employed in manufacturing industry to produce several castings with each cycle. *Unit dies* which are a combination of smaller dies are also used to manufacture metal castings in industry.

In a die casting production setup, the mold, (or die), is designed so that its mass is far greater than that of the casting. Typically the mold will have 1000 times the mass of the metal casting. So a 2 pound part will require a mold weighing a ton! Due to the extreme pressures and the continuous exposure to thermal gradients from the molten metal, wearing of the die can be a problem. However in a well maintained manufacturing process, a die can last hundreds of thousands of cycles before needing to be replaced.

Die Casting Machines

In addition to the opening and closing of the mold to prepare for and remove castings, it is very important that there is enough force that can be applied to hold the two halves of the mold together during the injection of the molten metal. Flow of molten metal under such pressures will create a tremendous force acting to separate the die halves during the process. Die casting machines are large and strong, designed to hold the mold together against such forces.

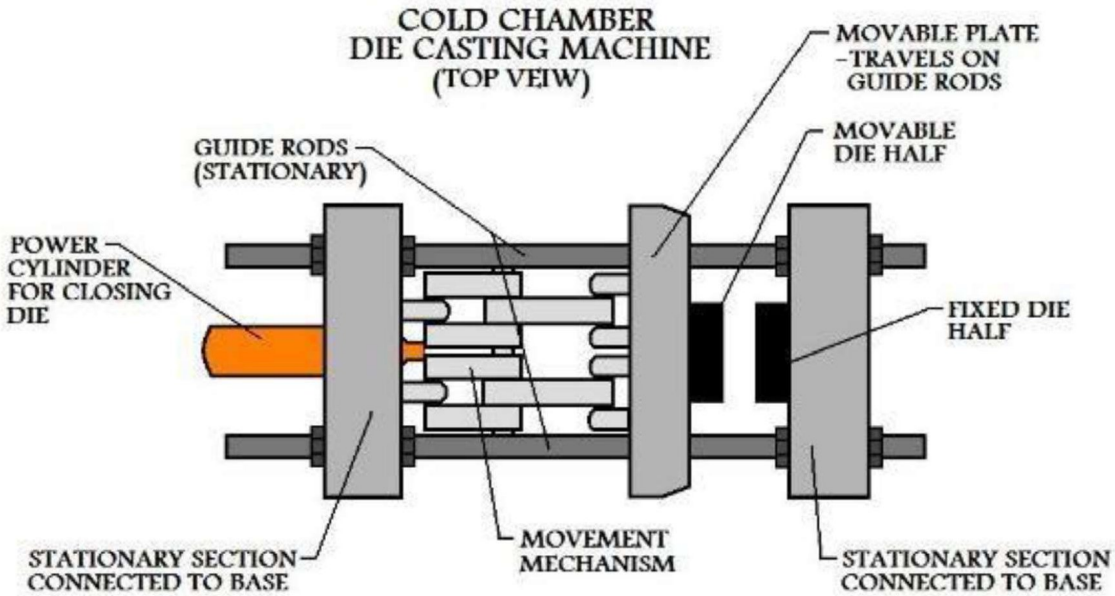

In manufacturing industry, die casting machines are rated on the force with which they can hold the mold closed. Clamping forces for these machines vary from around 25 to 3000 tons.

Melting Practices

Melting is an equally important parameter for obtaining a quality castings. A number of furnaces can be used for melting the metal, to be used, to make a metal casting. The choice of furnace depends on the type of metal to be melted. Some of the furnaces used in metal casting are as following:

- Crucible furnaces
- Cupola
- Induction furnace
- Reverberatory furnace

The crucible furnace as you see in the image below is how a crucible furnace looks. So, in this basically you have a crucible, which is normally made of clay or graphite and then this crucible will be kept and there will be heating source, and through this heating source this crucible is heated and the molten metal which is kept in the crucible normally that is melted. So, normally it is used for very you know smaller quantity of material can be normally is a held, but you can have the larger crucible, you have the crucible numbers, sometimes you have different numbers and that is basically specifies by amount of copper which can be melted into that particular number of crucible.

So, kgs of copper which can be melted like that so, if this is a large crucible certainly you need a large and that it has to be put in you will have the refractory, which is rammed from the other sides and then you will have the heat source, and then using that heat source you can heat the liquid metal which will be melted. So, as you see you will have a ladle you have the fire brick lining and then this is a chimney this is the covers, you can take the cover out and this is a air blower. So, that will be blown and then this way the heating will be done, and due to the heat the metal is melted here.

So, it is normally convenient for a smaller foundries. So, that you know for handling these smaller quantities you have to take this crucible out. So, for a smaller foundries when you have to melt in small quantities, this crucible furnace are basically important.

Now there may be basically coke fired or the oil or gas fired. So, basically when you have to use these normally for nonferrous melting, nonferrous metal these coke fired furnaces are used, and because you have the low installation cost in that low fuel cost and ease in operation. So, because of these reasons these coke fired furnaces are used for nonferrous metal. Now you have also the oil and gas

fired furnace. So, as the name indicts you have oil or gas, which are used as the heating source in such furnaces. So, basically they are cylindrical in shape and then the flame is produced by heating of this atomised fuel.

So, they will combine with air and then they will be heated, and then they will be sweeping around the crucible. So, that way it will have the enveloped in enveloped in the crucible and then uniformly heat the crucible. So, this way you have the combustion products will be coming into the contact with the charge, then they will be heating it and then they that way you can melt them by tilting you can take the you know metal out and pour it into the mould. So, you have certain advantages of this oil or gas fired furnace like you do not have any wastage of fuel. So, that is one of the. So, here if this is the oil or gas fired furnace you do not have much of the wastage of the fuel. So, you have more thermal efficiency in the case of oil or you know gas fired furnace, you have better temperature control by controlling the flow of this gases by controlling through a knob, you can have accurate control of the temperature, air contamination will be less in the case of this oil or gas fired furnaces. So, it will also save the floor space and you have also the low labour cost because here you need one person just simply to regulate these burners or so. So, this way you have these crucible furnaces and they are the different types normally you will have this used by the smaller foundries.

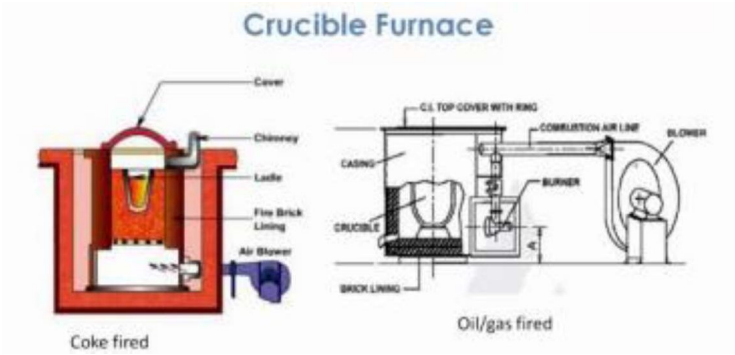

Cupola Furnace:
Cupola Furnace is a melting device used to melt cast iron, Ni-resist iron, and some bronzes and It is used in Foundries. The cupola can be made of any size and the size of the cupola is measured in diameters which range from 1.5 to 13 feet. The shape of the cupola is cylindrical and the equipment is arranged in the vertical fitted with doors which swings down and Out to drop bottom.

The top is open or fitted with a cap to escapes gases or rain entering. The cupola may be fitted with a cap to control emission of gases and to Pull the gases into the device to cool the gases and remove all the Particulate Matter.

The cupola shell is made of steel and has a refractory brick and plastic refractory Patching material lining. The clay and sand mixture is used as a bottom line and the lining is temporary. The coal can be mixed with the clay lining so when it heats up the coal decomposes and the bond becomes friable. This makes opening up of the two holes easy. The bottom of the cupola lining is compressed against the bottom doors. Cooling jackets are also fitted with some of the cupola's to keep the sides cool and with oxygen injection to make the coke fire burn hotter.

Principal:
The cupola furnace works on a simple principal that combustion of coke generates carbon dioxide and heat and this causes the iron to melt. The iron drains downward when get melted. Afterwards, the carbon dioxide is reduced partly, reduced again by consuming energy and coke with carbon monoxide, carbon dioxide and supplied coke is present in the reaction equilibrium so it is possible to show a defined combustion ratio for the utilization of thermal energy for the coke combustion.

Finally, high concentration of carbon monoxide is present in the exhaust gas and it can be extracted from the furnace.

Construction:

Cupola furnace constructed in the form of a hollow cylindrical vertical steel shell and it is lined from inside with a refractory material. This furnace is generally supported on four cast iron lags mounted on a concrete base.

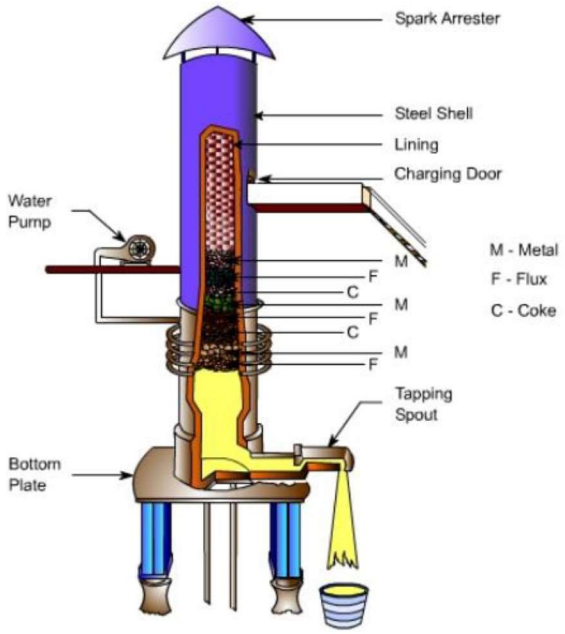

Cupola Furnace

The bottom of the furnace is closed by two cast iron doors hinged to the bed plate of the furnace. A wind box cast iron encircles to the outside of the furnace bottom. This box is connected to the furnace blower pipe known as the blast pipe. Air which supplies the oxygen necessary to burn the fuels forced through the cupola by a blower. The top of the furnace is shielded by a mesh screen and topped with a cone-shaped spark arrester, which permits the free vent of the waste gas and deflects spark and dust back into the furnace.

Working:

Basically, the operation of cupola furnace consists of following steps:

After building the cupola make sure it is dried completely before getting it to fire. Any slag around the tuyeres from previous runs needs to be cleaned properly.

Also, A broken part is repaired with the mixture of the silica sand and fire clay. Over the Brunt area, a layer of refractory material is applied To about thickness 6 inches or more is rammed on the bottom sloping toward the tap hole to ensure better flow of molten metal.

A hole opening of about 30 mm diameter and a tap hole of about 25 mm diameter is being provided there. A fire of wood is ignited. When the wood burns well coke is dumped on the bed well from the top. Make sure that the coke gets burned too. A bed of coke about 40 inches is placed next to the sand.

Firstly The air blast is turned on At a lower blowing rate than as normal for provoking the coke. A measuring rod is also used which indicates the height of the coke bed. For about 3 hours firing is done before the molten metal required.

Now the charge is fed into the cupola. Many factors like charge composition, affect the final structure of the gray cast iron obtained. It composed of 10% steel,50% grey cast iron scrap, and 3% limestone as a flux.

Alternate layers are formed by these constituents. Besides limestone, fluorspar and soda ash are also used as flux material. The main function of flux is to remove the impurities in the iron and protect the iron from oxidation.

After the fully charged furnace, it is allowed to remain as such for about 1 hour. As this process goes in charge slowly gets heated up as the air blast is kept shut this time and because of this, the iron gets soaked up.

At the end of the soaking period, the air blast is opened. The topmost opening is kept closed till the metal melts. The sufficient amount of metal is collected. The contents of the charge move downwards as the melting proceeds.

The rate of charging is equal to the rate of melting. The furnace is kept full throughout the heat. Closing feeding of charge and air blast is stopped when no more melting is required. The bottom plate swings to open when the prop is removed. The deposited slag is being removed. The cupola runs continuously and the melting period does not exceed 4 hours in most of the time. But can be operated for more than 10 hours.

Advantages:

- Low cost of construction.
- Low cost of maintenance.
- Low cost of operation.
- Very skilled operators are not required.
- Simple in construction
- Simple in operations.
- Melting composition can be controlled.
- Small floor area is required.

Disadvantages:

- With a long list of advantages, cupola furnace also comes with few of limitations or disadvantages and they are listed below:
- It is sometimes difficult to maintain the temperature in a cupola furnace.
- Metal elements are converted to their oxides which are not suitable for casting.

Application:

Cupola furnace is a used widely as a melting unit for cast iron. Some of the characteristic that makes the cupola furnace a primary method used in melting irons in the foundries. Some of them are:

- Cupola furnace is the only method which is continuous while operations.
- The melting rate of cupola furnace is high.

It is easy to operate. Operating costs in use of cupola furnace is comparability very low to other methods for this purpose.

Advanced Casting Processes:

Continuous Casting:

In this process, the molten metal is continuously supplied to the mold. The mold has an indeterminate length. When the molten metal is cast through a mold, it keeps travelling downward increasing in its length as the time passes by. The molten metal is continuously passed through the mold, at the same rate to match the solidifying casting. This results in casting of long strands of metal. The whole process of continuous casting is a precisely deliberated process that can produce astounding results.

Benefits of continuous casting

Unlike other processes of casting, the time line of steps in continuous casting is entirely different. While in other casting processes, each step of casting heating of the metal, poring of the molten liquid into casts, solidification and cast removal are a sequential process, in continuous casting all steps occur congruently and hence it saves a lot of processing time.

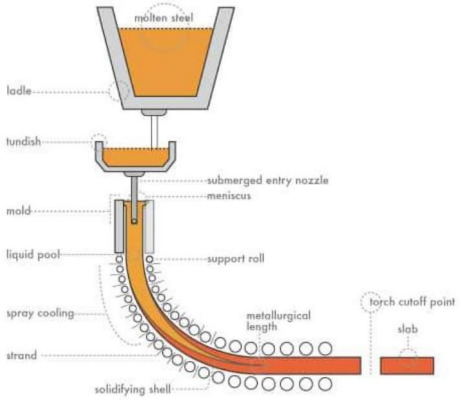

Continuous Casting of Steel

The process

Continuous casting has several advantages but it is also a process that needs distinct resources. This is the reason why this process is employed only in industries that require high yield of steel cast. The metal is first liquefied and poured into a tundish, which is a container that leads to the mold that will cast the steel. The tundish is placed about 80-90 feet above the ground level and the whole process of casting sues gravity to operate. The tundish is constantly supplied with molten steel to keep the process going. The whole process is controlled to ensure there is smooth flow of molten steel through tundish. Further, the impurities and slag are filtered in tundish before they move into the mold. The entrance of the mold is filled with inert gases to prevent reaction of molten steel with the gases in the environment like oxygen. The molten metal moves swiftly through the mold and it does not completely solidify in it.The entire mold is cooled with water that flows along the outer surface. Typically, steel casting solidifies along the walls of the casting and then gradually moves to the interior of the steel casting. The metal casting moves outside the mold with the help of different sets of rollers.

While one set of rollers bend the metal cast, another set will straighten it. This helps to change the direction of flow of the steel slab from vertical to horizontal.

Squeeze Casting

Squeeze casting is a combination of casting and forging process. The process can result in the highest mechanical properties attainable in a cast product. The development of squeeze casting process, can usher in tremendous possibility for manufacturing of components of aluminium alloys, which are not properly commercialized as yet. It can also be effective in for import substitution of critical components.

The process starts when the molten metal is poured into the bottom half of a pre-heated die. As soon as the metal starts solidifying, the upper half of the die closes and starts applying pressure during the solidification process. The extent of pressure applied is significantly less than that in forging. Parts of great detail can be produced. Coring can be used in tandem with the process to form holes and recesses. The high pressure and the close contact of molten alloy with the metal die surface results in minimum porosity and improvised mechanical properties. This process can be used for both ferrous and non-ferrous metals. This technique is very much suited for making fiber-reinforced castings from fiber cake preform.

Squeeze Casting Process (or squeeze forming) are of two types:

Direct (liquid metal forging)

This is done in equipment which closely resemble the forging process. Liquid metal is poured into lower die segment, contained in a hydraulic press. Upper die segment is closed. A very high pressure of 100 Mpa or more is applied to the whole cavity until the part gets solidified.

Indirect Squeeze Casting

This process is very much similar to die casting. It takes place in a die casting equipment. This equipment van be vertical or horizontal. The melt which is cleaned and grain -refined is poured in to the shot sleeve of a horizontal or vertical casting machine. The melt is then injected into the die through relatively large gates. This is accomplished through relatively slow velocity (less than 0.5m/sec). The melt in the die cavity is then solidified under pressures, ranging from 55MPa to 300MPa. In this process the parts displays good tensile strength.

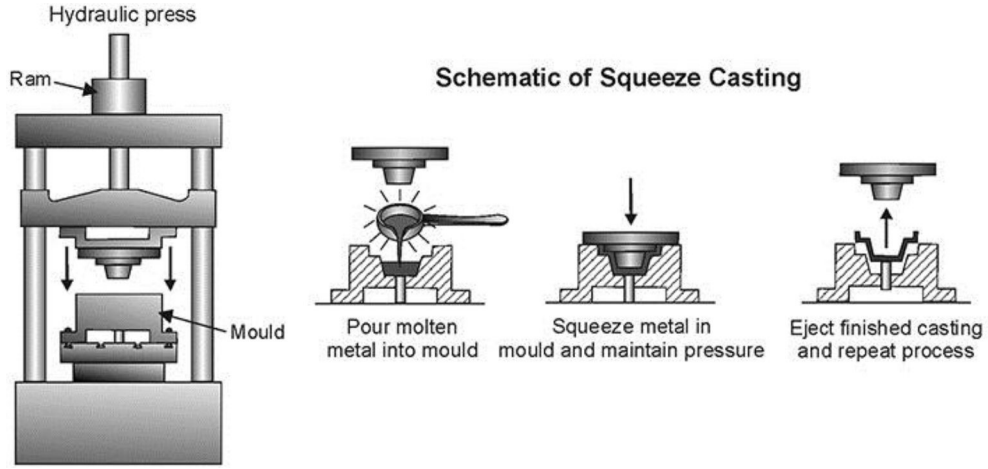

Squeeze Casting

Application of Squeeze Casting:

Squeeze casting is an economical, simple and convenient process. It has found extensive application in automotive industry in producing aluminium front steering knuckles, chassis frames, brackets or nodes. High capacity propellers for boat-engine.

Vacuum Mould Casting:

V-process or vacuum molding which was developed by Japanese using unbonded sand and vacuum is a perfect substitute for permanent mold and die casting process. Now the process is employed worldwide as an effective method to cast quality products in start up and low to medium job. The most highlighted feature of vacuum molding is that the flow of molten metal can be controlled.

Process: Patterns are mounted on plates and boards, which are perforated, and each board is connected with a vacuum chamber. Unbonded sand is used for the molding purpose. Permeability is not a concern in this casting process, therefore sand of the finest structure can be used. The vented, plated pattern is coated with a layer of flexible plastic, which expand when the vacuum is applied in the mold. Enabling, the pattern to be stripped easily from the mold. Patterns should be perfectly smooth since in vacuum molding, every small intricate design gets imprinted on the cast. The pattern are not damaged during the process so they can be uses repeatedly.

In the vacuum molding process the mold are made is two parts (cope & drag) with each parts attached with its vacuum chamber. The pattern is kept and a metal or wooden flask place around it. Unbonded sand is poured over the molding box, and the tables is shaken vibrantly, by which the sand particle become tight and compact. Another layer of plastic sheet is draped over the molding box. The two halves are joined. Now the vacuum is formed through the patter. The vacuum makes the sand strong and the pattern coating expands, which makes it easy to strip the pattern from the mold.

The mold in kept in a housing and placed above a furnace of molten metal. Using sprue or gating the mold is connected inside the molten metal. When the vacuum from the mold is evacuated the molten metal gets forces into the mold, because of the difference in pressure that is created between the outer atmosphere and the mold. The plastic sheet melts and the mold is filled with the molten metal. After the metal solidifies and cools, the vacuum is released. The sand mold starts to fall apart as the solidification process completes. This sand can be cooled and reused for further casting process.

The power of vacuum: In mid 1600,Otto von Guericke a German mayor and scientist conducted the first experiment to prove the power of vacuum. He joined two large copper hemispheres and evacuated the air out of it. Now, eight horses were hooked on opposite side of the hemispheres. The horse pulled the hemisphere is two different direction, but the ball could not be torn apart. Guericke then let in air and the hemisphere came apart. In this way he proved the power and possibilities of vacuum.

Application: Vacuum molding process can be used to cast industrial components from both ferrous and non-ferrous metals.

Application:

- Casted products have high dimensional accuracy and surface finish.
- The process is economical, environment friendly and clean
- No moisture related defects for the castings
- Provides consistent thickness for wall that give the casting an aesthetic appeal
- Low cost operations.

Evaporative casting

Consumable or eva-foam casting is a sand casting process where the foam pattern evaporates into the sand mold. A process similar to investment casting, this expendable casting process is predicted to be used for 29% of aluminum and 14% of ferrous casting in 2010. There are two main **evaporative casting** process lost-foam casting and full moldcasting which are widely used because intricate design can be cast with relative ease and with reasonable expense. The main difference between the two is that in the lost-foam casting unbonded sand is used and in the full-mold casting green sand or bonded sand is used.

Process: In the first step of **evaporative casting**, a foam pattern is shaped using material like polystyrene. The pattern is attached with sprues, and gates using adhesives and brushed with refractory substances so that the molds are strong and resistant to high temperature. Refractory covered pattern assembly is then surrounded by a sand mixture to form a mold. In some instances the pattern assembly is mixed in ceramic slurry which forms a shell round the pattern when it dries.

In both cases, the mold in kept at a specific temperature to allow the metal to flow smoothly and enter into every designs and cuts made by the pattern. Molten metal is poured into the mold and the pattern-forming material disappears into the mold. The molten metal takes the shape of the mold and solidifies. When the metal solidifies it is removed from the mold to form the casting.

Unlike in the traditional sand casting method, in evaporative sand casting, the pattern does not have to be removed from the mold which reduces the need for draft provisions. Some of the parameter that are used to determine the quality of a eva-foam casting are grain fineness number, time of vibration, degree of vacuum and pouring temperature on surface roughness etc.

Applications: **Evaporative castings** is used for steel-casting cast iron parts like water pipe and pump parts, aluminum castings etc.

Advantages:

- High dimensional accuracy and superior casting surface smoothness
- Reduced work process unlike other casting methods
- Light weight casting are be done
- Casting have improved heat resistance and also abrasion resistance and other cast steel properties.
- Complicated shapes can be cast without using cores or drafts.

Ceramic Shell Casting:

Introduction: A process that can be fully automated, ceramic shell molding is the most rapidly used technique for mold and core making. Also known a croning process, this casting technique was invented and patented by J.Croning during World War II. Also known as the process, shell molding technique is used for making thin sections and for acquiring surface finish and dimensional accuracy.

Process: In the first stage of ceramic shell molding, a metal pattern is made which is resistant to high temperature and can withstand abrasion due to contact with sand. The sand and resin mixture for the shell mold is brought in contact with the pattern. The mold is placed in an oven where the resin is cured. This process causes the formation of a thin shell around the pattern. The thickness of the mold can be 10-20mm as compared to the heavy mold made for sand castings. When fully cured the skin is removed from the pattern, which is the shell mold.

For each **ceramic shell molds** there are two halves know as the cope and drag section. The two sections are joined by resin to form a complete shell mold. If an interior design is required, the cores are placed inside the mold before sealing the two parts.

For heavy castings, ceramic shell molds are held together by metals or other materials. Now, the molten metal is poured into the mold, and once it solidifies, the shell is broken to remove the casting. This process is highly useful for near net shape castings. Another advantage is that shell molding can be automated.

Automated Ceramic Shell Molding Machines and Robots: Shell molding machines like the cold shell molding machines helps in making castings with little molding material. In a cold shell molding machine the molds are made using cold binding materials. In it patterns made of wood, metal or plaster can be used. And the greatest benefit is that the mold can be kept horizontally or vertically.

Robotizing: Using robots for ceramic shell molding is a milestone for the old molding technology. Robots which are multi functional and re programmable are used in some foundries. Robots are used for a number of activities like robotic gate and sprue removal, robotic cutting of wedges for gate valves, robotic core setting, etc. The robots are reliable, consistent, more productive, provides better surface finish, and less machining etc.

Applications: A sizable amount of the casting in the steel industry are made by shell molding process, that ensures better profitability. Carbon steel, alloy steel, stainless steel, low alloys, aluminum alloys, copper, are all cast using shell molding process. Casting that require thin section and excellent dimensional accuracy are cast using this process. Body panes, truck hoods, small size boats, bath tubs, shells of drums, connecting rods, gear housings, lever arms, etc. are cast using croning process.

Advantages:

- Thin sections, complex parts and intricate designs can be cast
- Excellent surface finish and good size tolerances
- Less machining required for the castings
- Near net shape castings, almost 'as cast' quality
- Simplified process that can be handled by semi skilled operators
- Full mechanized and automated casting process
- Less foundry space required.

Casting Defects:

The following are the major defects, which are likely to occur in sand castings

- Gas defects
- Shrinkage cavities
- Molding material defects
- Pouring metal defects
- Mold shift

Gas Defects

A condition existing in a casting caused by the trapping of gas in the molten metal or by mold gases evolved during the pouring of the casting. The defects in this category can be classified into blowholes and pinhole porosity. Blowholes are spherical or elongated cavities present in the casting on the surface or inside the casting. Pinhole porosity occurs due to the dissolution of hydrogen gas, which gets entrapped during heating of molten metal.

Causes

The lower gas-passing tendency of the mold, which may be due to lower venting, lower permeability of the mold or improper design of the casting. The lower permeability is caused by finer grain size of the sand, high percentage of clay in mold mixture, and excessive moisture present in the mold.

- Metal contains gas
- Mold is too hot
- Poor mold burnout

Shrinkage Cavities

These are caused by liquid shrinkage occurring during the solidification of the casting. To compensate for this, proper feeding of liquid metal is required. For this reason risers are placed at the appropriate places in the mold. Sprues may be too thin, too long or not attached in the proper location, causing shrinkage cavities. It is recommended to use thick sprues to avoid shrinkage cavities.

Molding Material Defects

The defects in this category are cuts and washes, metal penetration, fusion, and swell.

Cut and washes

These appear as rough spots and areas of excess metal, and are caused by erosion of molding sand by the flowing metal. This is caused by the molding sand not having enough strength and the molten metal flowing at high velocity. The former can be taken care of by the proper choice of molding sand and the latter can be overcome by the proper design of the gating system.

Metal penetration

When molten metal enters into the gaps between sand grains, the result is a rough castingsurface. This occurs because the sand is coarse or no mold wash was applied on the surface of the mold. The coarser the sand grains more the metal penetration.

Fusion

This is caused by the fusion of the sand grains with the molten metal, giving a brittle, glassy appearance on the casting surface. The main reason for this is that the clay or the sand particles are of lower refractoriness or that the pouring temperature is too high.

Swell

Under the influence of metallostatic forces, the mold wall may move back causing a swell in the dimension of the casting. A proper ramming of the mold will correct this defect.

Inclusions

Particles of slag, refractory materials, sand or deoxidation products are trapped in the casting during pouring solidification. The provision of choke in the gating system and the pouring basin at the top of the mold can prevent this defect.

Pouring Metal Defects

The likely defects in this category are

Mis-runs and

Cold shuts.

A mis-run is caused when the metal is unable to fill the mold cavity completely and thus leaves unfilled cavities. A mis-run results when the metal is too cold to flow to the extremities of the mold cavity before

freezing. Long, thin sections are subject to this defect and should be avoided in casting design.

A cold shut is caused when two streams while meeting in the mold cavity, do not fuse together properly thus forming a discontinuity in the casting. When the molten metal is poured into the mold cavity through more-than-one gate, multiple liquid fronts will have to flow together and become one solid. If the flowing metal fronts are too cool, they may not flow together, but will leave a seam in the part. Such a seam is called a cold shut, and can be prevented by assuring sufficient superheat in the poured metal and thick enough walls in the casting design.

The mis-run and cold shut defects are caused either by a lower fluidity of the mold or when the section thickness of the casting is very small. Fluidity can be improved by changing the composition of the metal and by increasing the pouring temperature of the metal.

Mold Shift

The mold shift defect occurs when cope and drag or molding boxes have not been properly aligned.

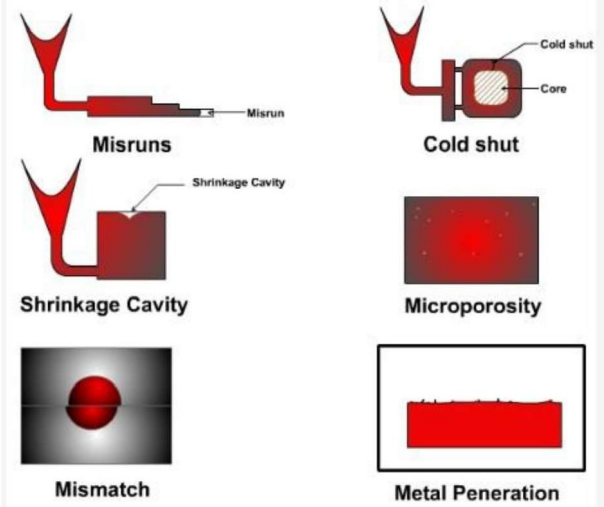

Casting Defects

UNIT II

WELDING

Unit - II

Welding which is the process of joining two metallic components for the desired purpose, can be defined as the process of joining two similar or dissimilar metallic components with the application of heat, with or without the application of pressure and with or without the use of filler metal. Heat may be obtained by chemical reaction, electric arc, electrical resistance, frictional heat, sound and light energy. If no filter metal is used during welding then it is termed as 'Autogenous Welding Process'.

During 'Bronze Age' parts were joined by forge welding to produce tools, weapons and ornaments etc, however, present day welding processes have been developed within a period of about a century. First application of welding with carbon electrode was developed in 1885 while metal arc welding with bare electrode was patented in 1890. However, these developments were more of experimental value and applicable only for repair welding but proved to be the important base for present day manual metal arc (MMAW) welding and other arc welding processes.

In the mean time resistance butt welding was invented in USA in the year 1886. Other resistance welding processes such as spot and flash welding with manual application of load were developed around 1905. With the production of cheap oxygen in 1902, oxy – acetylene welding became feasible in Europe in 1903.

When the coated electrodes were developed in 1907, the manual metal arc welding process become viable for production/fabrication of components and assemblies in the industries on large scale.
Subsequently other developments are as follows:

- Thermit Welding (1903)
- Cellulosic Electrodes (1918)
- Arc Stud Welding (1918)
- Seam Welding of Tubes (1922)
- Mechanical Flash Welder for Joining Rails (1924)
- Extruded Coating for MMAW Electrodes (1926)
- Submerged Arc Welding (1935)
- Air Arc Gouging (1939)
- Inert Gas Tungsten Arc (TIG) Welding (1941)
- Iron Powder Electrodes with High Recovery (1944)
- Inert Gas Metal Arc (MIG) Welding (1948)
- Electro Slag Welding (1951)
- Flux Cored Wire with CO_2 Shielding (1954)
- Electron Beam Welding (1954)
- Constricted Arc (Plasma) for Cutting (1955)
- Friction Welding (1956)
- Plasma Arc Welding (1957)
- Electro Gas Welding (1957)
- Short Circuit Transfer for Low Current, Low Voltage Welding with CO_2 Shielding (1957)
- Vacuum Diffusion Welding (1959)
- Explosive Welding (1960)

big jolt to application of welding. However, it had drawn

attention to fracture problem in welded structures.

Applications:

Although most of the welding processes at the time of their developments could not get their place in the production except for repair welding, however, at the later stage these found proper place in manufacturing/production. Presently welding is widely being used in fabrication of pressure vessels, bridges, building structures, aircraft and space crafts, railway coaches and general applications. It is also being used in shipbuilding, automobile, electrical, electronic and defense industries, laying of pipe lines and railway tracks and nuclear installations etc.

General Applications:

Welding is vastly being used for construction of transport tankers for transporting oil, water, milk and fabrication of welded tubes and pipes, chains, LPG cylinders and other items. Steel furniture, gates, doors and door frames, body and other parts of white goods items such as refrigerators, washing machines, microwave ovens and many other items of general applications are fabricated by welding.

Pressure Vessels:

One of the first major use of welding was in the fabrication of pressure vessels. Welding made considerable increases in the operating temperatures and pressures possible as compared to riveted pressure vessels.

Bridges:

Early use of welding in bridge construction took place in Australia. This was due to problems in transporting complete riveted spans or heavy riveting machines necessary for fabrication on site to remote areas. The first all welded bridge was erected in UK in 1934. Since then all welded bridges are erected very commonly and successfully.

Ship Building:

Ships were produced earlier by riveting. Over ten million rivets were used in 'Queen Mary' ship which required skills and massive organization for riveting but welding would have allowed the semiskilled/ unskilled labor and the principle of pre-fabrication. Welding found its place in ship building around 1920 and presently all welded ships are widely used. Similarly submarines are also produced by welding.

Building Structures:

Arc welding is used for construction of steel building leading to considerable savings in steel and money. In addition to building, huge structures such as steel towers etc also require welding for fabrication.

Aircraft and Spacecraft:

Similar to ships, aircrafts were produced by riveting in early days but with the introduction of jet engines welding is widely used for aircraft structure and for joining of skin sheet to body.

Space vehicles which have to encounter frictional heat as well as low temperatures require outer skin and other parts of special materials. These materials are welded with full success achieving safety and reliability.

Railways:

Railways use welding extensively for fabrication of coaches and wagons, wheel tyres laying of new railway tracks by mobile flash butt welding machines and repair of cracked/damaged tracks by thermit welding.

Automobiles:

Production of automobile components like chassis, body and its structure, fuel tanks and joining of door hinges require welding.

Electrical Industry:

ization of electrical energy, welding plays important role.
neration system, such as penstocks, water control gates,
istribution system equipment are fabricated by welding.

Turbine blades and cooling fins are also joined by welding.

Electronic Industry:

Electronic industry uses welding to limited extent such as for joining leads of special transistors but other joining processes such as brazing and soldering are widely being used. Soldering is used for joining electronic components to printed circuit boards. Robotic soldering is very commonfor joining of parts to printed circuit boards of computers, television, communication equipment and other control equipment etc.

Nuclear Installations:

Spheres for nuclear reactor, pipe line bends joining two pipes carrying heavy water and other components require welding for safe and reliable operations.

Defence Industry:

Defence industry requires welding for joining of many components of war equipment. Tank bodies fabrication, joining of turret mounting to main body of tanks are typical examples of applications of welding.

Micro-Joining:

It employs the processes such as micro-plasma, ultrasonic, laser and electron beam welding, for joining of thin wire to wire, foil to foil and foil to wire, such as producing junctions of thermocouples, strain gauges to wire leads etc.

Apart from above applications welding is also used for joining of pipes, during laying of crude oil and gas pipelines, construction of tankers for their storage and transportation. Offshore structures, dockyards, loading and unloading cranes are also produced by welding.

Classification of Welding Processes:

Welding processes can be classified based on following criteria;

1. Welding with or without filler material.
2. Source of energy of welding.
3. Arc and Non-arc welding.
4. Fusion and Pressure welding.

1. Welding can be carried out with or without the application of filler material. Earlier only gas welding was the fusion process in which joining could be achieved with or without filler material. When welding was done without filler material it was called 'autogenous welding'. However, with the development of TIG, electron beam and other welding processes such classification created confusion as many processes shall be falling in both the categories.
2. Various sources of energies are used such as chemical, electrical, light, sound, mechanical energies, but except for chemical energy all other forms of energies are generated from electrical energy for welding. So this criterion does not justify proper classification.
3. Arc and Non-arc welding processes classification embraces all the arc welding processes in one class and all other processes in other class. In such classification it is difficult to assign either of the class to processes such as electroslag welding and flash butt welding, as in electroslag welding the process starts with arcing and with the melting of sufficient flux the arc extinguishes while in flash butt welding tiny arcs i.e. sparks are established during the process and then components are pressed against each other. Therefore, such classification is also not perfect.
4. Fusion welding and pressure welding is most widely used classification as it covers all processes in both the categories irrespective of heat source and welding with or without filler material. In fusion welding all those processes are included where molten metal solidifies freely while in pressure welding molten metal if any is retained in confined space under pressure (as may be in case of resistance spot welding or arc stud welding) solidifies under pressure or semisolid metal cools under pressure. This type of classification poses no problems so it is considered as the best criterion.

Processes falling under the categories of fusion and pressure welding are shown in Figures 2.1 and 2.2.

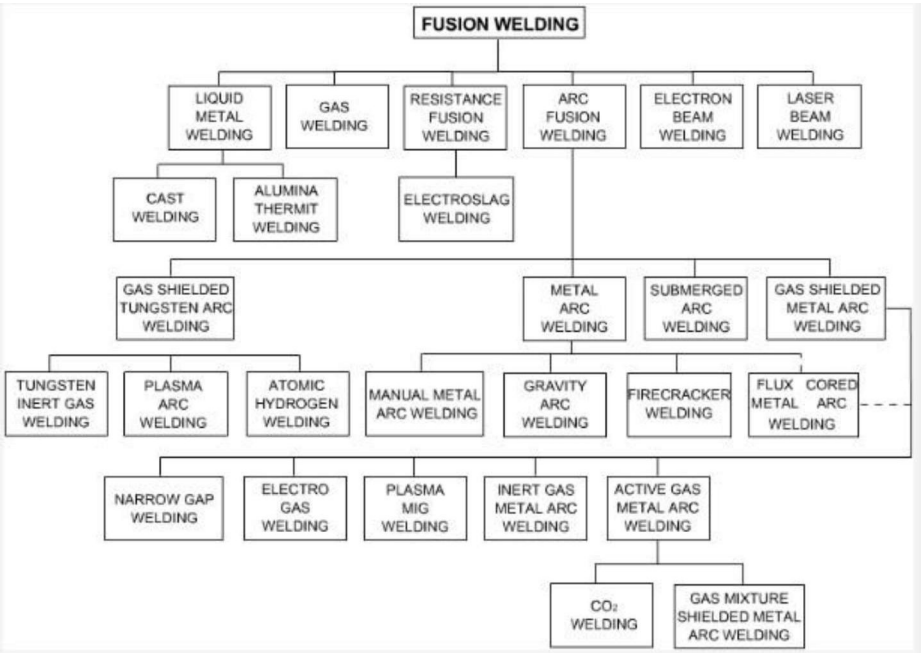

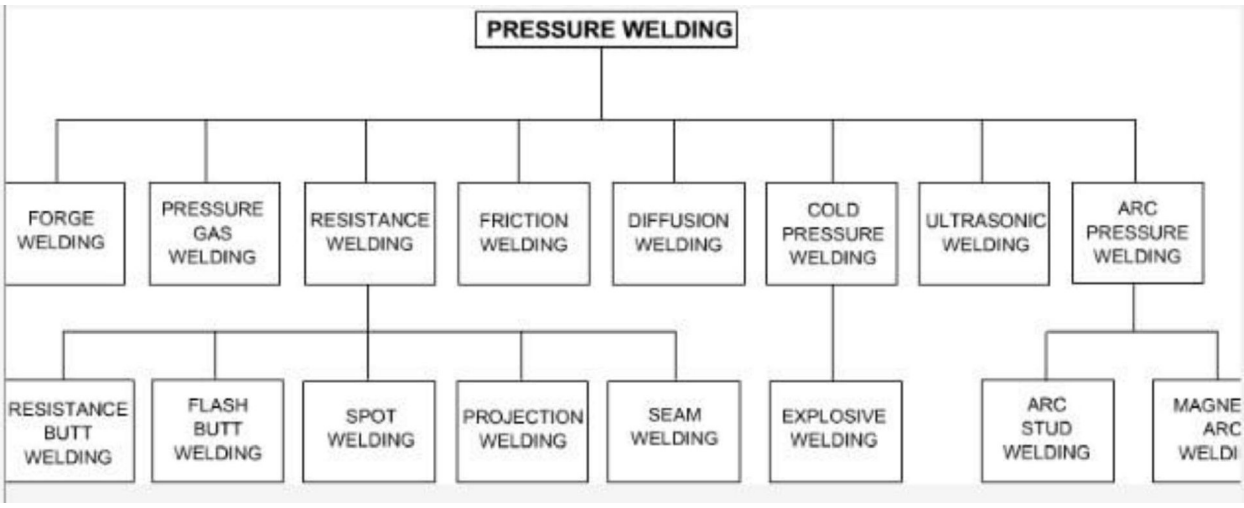

Need of welding symbols It is important to communicate information about welding procedure without any ambiguity to all those who are involved in various steps of fabrication of successful weld joints ranging from edge preparation to final inspection and testing of welds. To assist in this regard, standard symbols and methodology for representing the welding procedure and other conditions have been developed. Symbols used for showing the type of weld to be made are called weld symbols. Some common weld symbols are shown below.

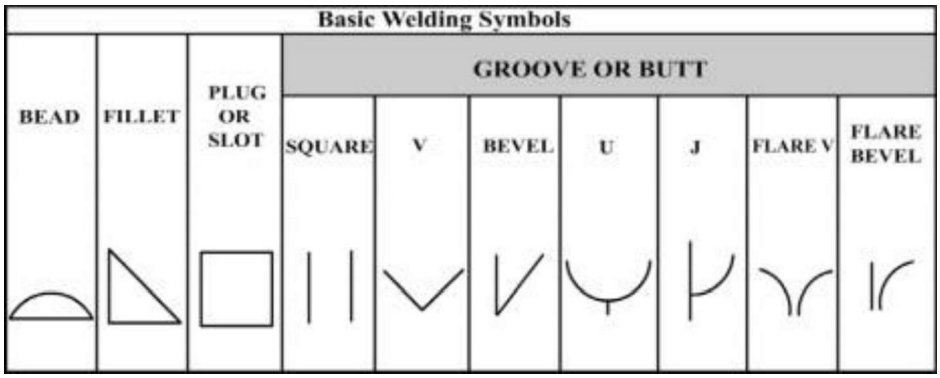

Basic Weld Symbols

Symbols which are used to show not only the type of weld but all relevant aspects related with welding like size & location of weld, welding process, edge preparation, bead geometry and weld inspection process and location of the weld to be fabricated and method of weld testing etc. are called welding symbols. Following sections present standard terminologies and joints used in field of welding engineering.

22.7 Types of weld Joints the classification of weld joints is based on the orientation of plates/members to be welded. Common types of weld joints and their schematics are shown in Fig. 22.2 (a-e). Butt joint: plates are in same horizontal plane and aligned with maximum deviation of 50. Lap joint: plates overlapping each other and the overlap can just one side or both the sides of plates being welded Corner joint: joint is made by melting corners of two plates being welded and therefore plates are approximately perpendicular (750 - 900) to each other at one side of the plates being welded Edge joint: joint is made by melting the edges of twoplates to be welded and therefore the plates are almost parallel (00 - 50)

T joint: one plate is approximately perpendicular to another plate (850 - 900).

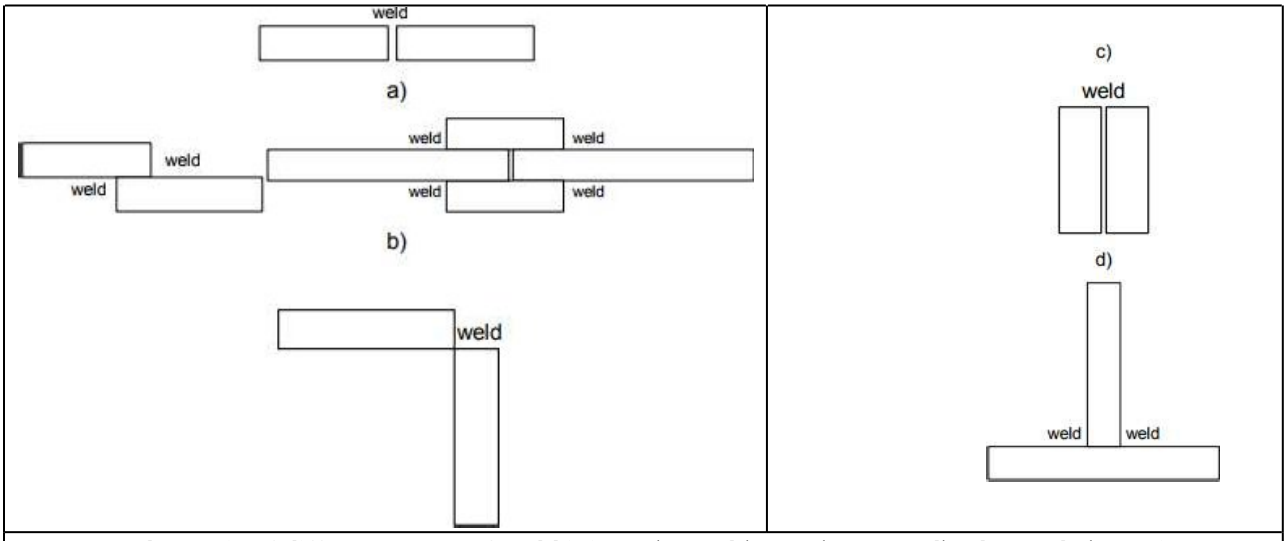

Schematic of different types of weld joints a) Butt b) Lap c) Corner d) Edge and e) T- Joint

Types of weld:

This classification in based on the combined factors like "how weld is made" and "orientation of plates" to be welded. Common types of weld joints and their schematics are shown in Figure shown below.

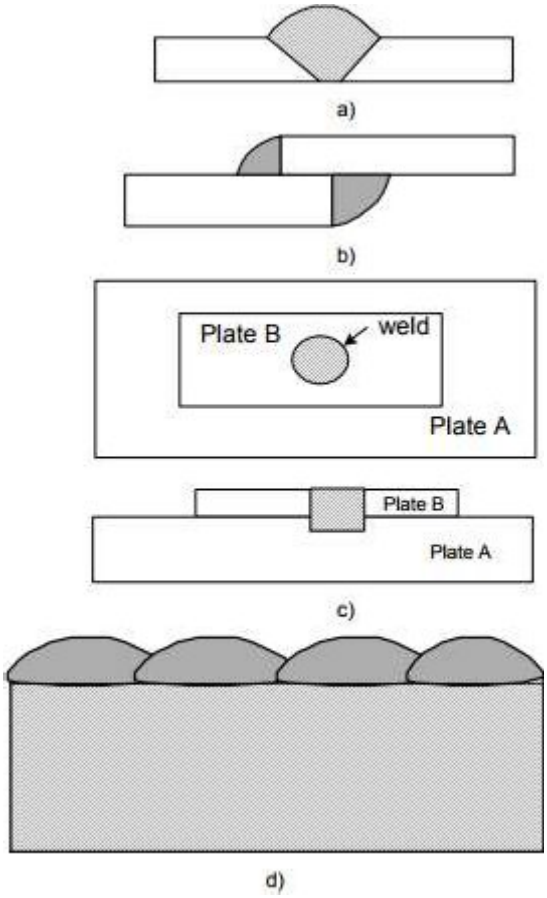

Schematic of different types of welds a) Groove b) Fillet c) Plug and d) Bead on Plate

Gas Metal Arc Welding

Gas metal arc welding (GMAW) is the process in which arc is struck between bare wireelectrode and workpiece. The arc is shielded by a shielding gas and if this is inert gas such as argon or helium then it is termed as metal inert gas (MIG) and if shielding gas is active gas such as CO_2 or mixture of inert and active gases then process is termed as metal active gas (MAG) welding. Figure 9.1 illustrates the process of GMA welding.

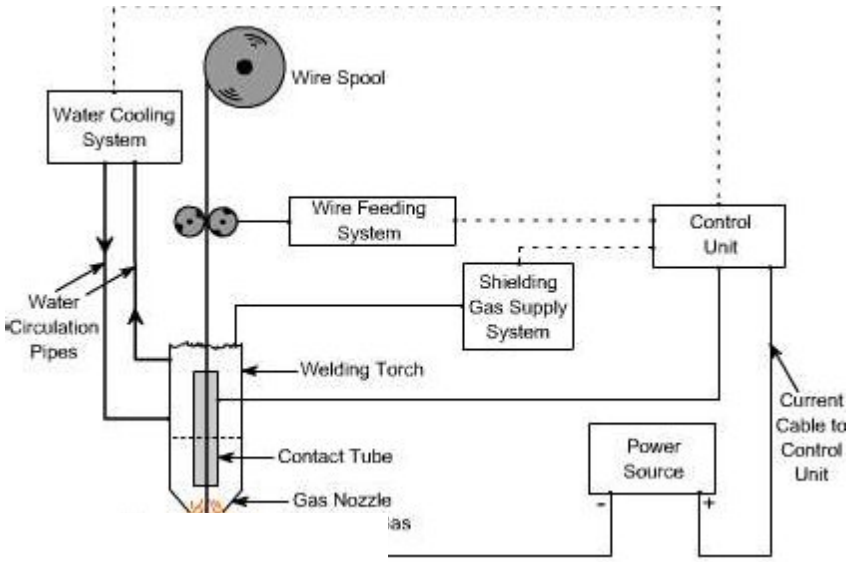

gram of GMA Welding

Direct current flat characteristic power source is the requirement of GMAW process. The electrode wire passing through the contact tube is to be connected to positive terminal of power source so that stable arc is achieved. If the electrode wire is connected to negative terminal then it shall result into unstable spattery arc leading to poor weld bead. Flat characteristic leads to self adjusting or self regulating arc leading to constant arc length due to relatively thinner electrode wires.

GMA welding requires consumables such as filler wire electrode and shielding gas. Solid filler electrode wires are normally employed and are available in sizes 0.8, 1.0, 1.2 and 1.6 mm diameter. Similar to submerged arc welding electrode wires of mild steel and low alloyed steel, are coated with copper to avoid atmospheric corrosion, increase current carrying capacity and for smooth movement through contact tube. The electrode wire feeding system is shown in Figure 9.2.

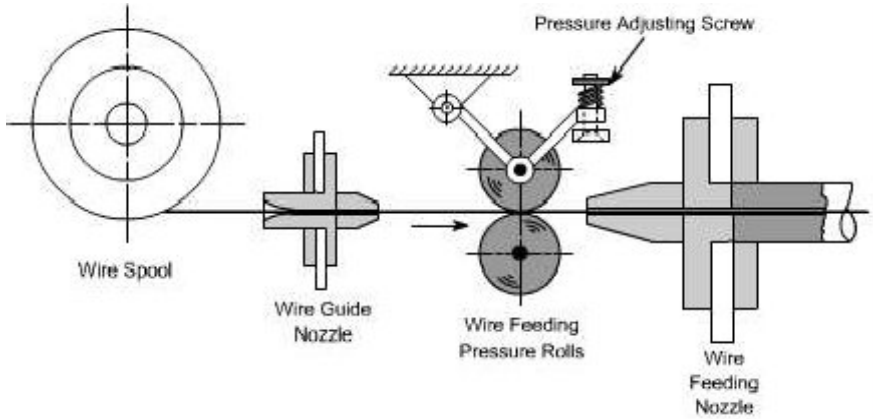

Electrode Wire Feeding System

Pressure adjusting screw is used to apply required pressure on the electrode wire during its feeding to avoid any slip. Depending on the size and material of the wire, different pressures are required for the smooth feeding of wire with minimum deformation of the wire. Further, wire feeding rolls have grooves of different sizes and are to be changed for a particular wire size.

The range of welding current and voltage vary and is dependent on material to be welded, electrode size and mode of metal transfer i.e. mode of molten drop formed at the tip of electrode and its transfer to the weld pool. This process exhibits most of the metal transfer modes depending on welding parameters.

The range of current and voltage for a particular size of electrode wire, shall change if materialof electrode wire is changed. With lower currents normally lower voltages are employed while higher voltages are associated with higher currents during welding. Thin sheets and plates in all positions or root runs in medium plates are welded with low currents while medium and heavy plates in flat position are welded with high currents and high voltages. Welding of medium thickness plates in horizontal and vertical positions are welded with medium current and voltage levels.

Table 9.1 gives the total range of currents and voltages for different sizes of structural steel i.e. mild steel electrodes of different sizes.

Table 9.1: Welding Current and Voltage Ranges for Mild Steel Electrodes

Electrode Wire Diameter (mm)	Current Range (A)	Voltage Range (V)
0.8	50-180	14-24
		16-26
		17-30

1.6	150-380	18-34

Both inert gases like argon and helium and active gases like CO_2 and N_2 are being used for shielding depending upon the metal to be welded. Mixtures of inert and active gases like CO_2 and O_2 are also being used in GMA welding process. For mild steel carbon dioxide is normally used which gives high quality, low current out of position welding i.e. also in welding positions other than flat position. Low alloyed and stainless steels require argon plus oxygen mixtures for better fluidity of molten metal and improved arc stability. The percentage of oxygen varies from 1-5% and remaining is argon in argon and oxygen mixtures. However, low alloy steels are also welded with 80% argon and 20% CO_2 mixture.

Nickel, monel, inconel, aluminum alloys, magnesium, titanium, aluminum bronze and silicon bronze are welded with pure argon. Nickel and nickel alloys may sometimes be welded with mixture of argon and hydrogen (upto 5%). Copper and aluminum are also welded with 75% helium and 25% argon mixture to encounter their thermal conductivity. Nitrogen may be used for welding of copper and some of its alloys, but nitrogen and argon mixtures are preferred over pure nitrogen for relatively improved arc stability.

The process is extremely versatile over a wide range of thicknesses and all welding positions for both ferrous and nonferrous metals, provided suitable welding parameters and shielding gases are selected. High quality welds are produced without the problem of slag removal. The process can be easily mechanized / automated as continuous welding is possible. However, process is costly and less portable than manual metal arc welding. Further, arc shall be disturbed and poor quality of weld shall be produced if air draught exists in working area.

GMA welding has high deposition rate and is indispensable for welding of ferrous and specially for nonferrous metals like aluminum and copper based alloys in shipbuilding, chemical plants, automobile and electrical industries. It is also used for building structures.

This chapter presents the basic principle of arc welding processes with focus on shielded metal arc welding. Further, the influence of welding parameters on performance of weld joint and the role of coating on electrode have been described. Keywords: Arc welding, shielded metal arc welding, shielding in SMAW, electrode coating, welding current, electrode size

Arc Welding Process All arc welding processes apply heat generated by an electric arc for melting the faying surfaces of the base metal to develop a weld joint (Fig. 11.1). Common arc welding processes are manual metal or shielded metal arc welding (MMA or SMA), metal inert gas arc (MIG), tungsten inert gas (TIG), submerged arc (SA), plasma arc (PA), carbon arc (CA) selding etc.
Schematic diagram showing various elements of SMA welding system

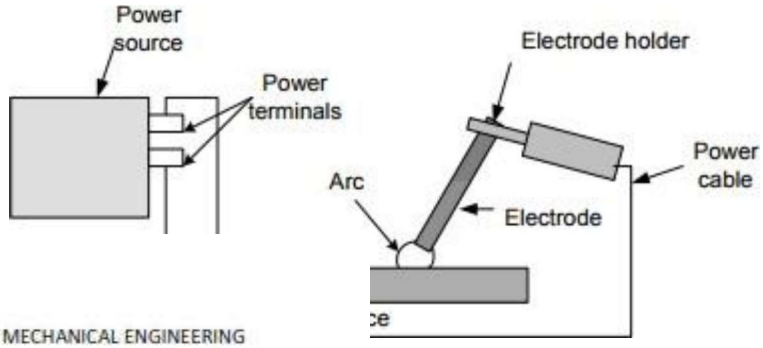

Arc Welding

Forge Welding

Principle

As we discussed, forge welding is a solid state welding process in which both the plates are heated quite below its melting temperature. This heating deforms the work pieces plastically. Now a repeated hammering or high pressurize load is applied on these plates together. Due to this high pressure and temperature, inter-molecular diffusion takes place at the interface surface of the plates which make a strong weld joint. This is basic principle of forge welding. One of the basic requirement of this **types of welding**, is clean interface surface which should be free from oxide or other contaminant particles. To prevent the welding surface from oxidation, flux is used which mixes with the oxide and lower down its melting temperature and viscosity. This allow to flow out the oxide layer during heating and hammering process.

Working

Forge welding was one of the most applied welding method in ancient time. This is a fundamental welding process of all solid state welding. Its working can be summarized as follow.

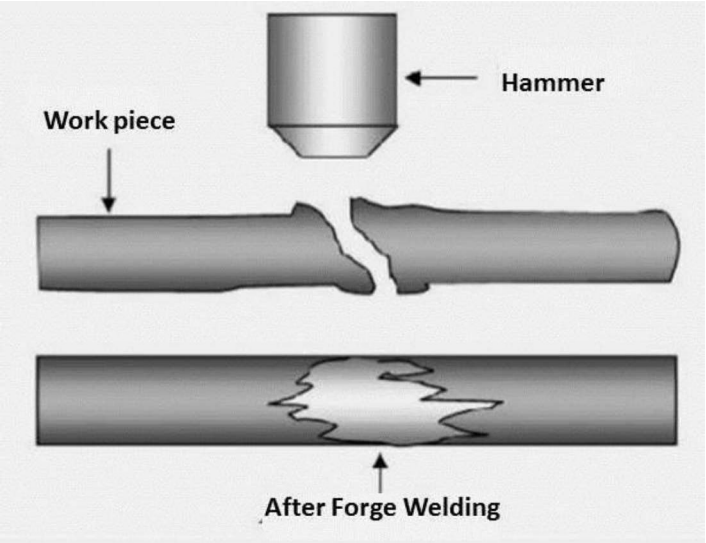

- First both the work plates heated together. The heating temperature is about 50 to 90% of its melting temperature. Both the plates are coated with flux.
- Now manual hammering is done by a blacksmith **hammer** for making a joint. This process is repeated until a proper joint is created.
- For welding large work pieces, mechanical hammering is used which is either driven by electric motor or by using hydraulic mean. Sometime dies are used which provides finished surface.

Application

- It is used to join steel or iron.
- It is used to manufacture gates, prison cells etc.
- It is widely used in cookware.
- It was used to join boiler plates before introduction of other welding process.
- It was used to weld weapon like sword etc.

Advantages

- It is simple and easy.
- It does not require any costly equipment for weld small pieces.
- It can weld both similar and dissimilar metals.
- Properties of weld joint is similar to base material.
- No filler material required.

Disadvantages

- Only small objects can be weld. Larger objects required large press and heating furnaces, which are not economical.
- High skill required because excessive hammering can damage the welding plates.
- High **Welding defects** involve.
- It cannot use as mass production.
- Mostly suitable for iron and steel.
- It is a slow welding process.

Resistance Welding

Resistance welding processes are pressure welding processes in which heavy current is passed for short time through the area of interface of metals to be joined. These processes differ from other welding processes in the respect that no fluxes are used, and filler metal rarely used. All resistance welding operations are automatic and, therefore, all process variables are preset and maintained constant. Heat is generated in localized area which is enough to heat the metal to sufficient temperature, so that the parts can be joined with the application of pressure. Pressure is applied through the electrodes.

The heat generated during resistance welding is given by following expression:

$$H = I^2 R T$$

Where, **H** is heat generated

I is current in amperes

R is resistance of area being welded

T is time for the flow of current

The process employs currents of the order of few KA, voltages range from 2 to 12 volts and times vary from few ms to few seconds. Force is normally applied before, during and after the flow of current to avoid arcing between the surfaces and to forge the weld metal during post heating. The necessary pressure shall vary from 30 to 60 N mm^{-2} depending upon material to be welded and other welding conditions. For good quality welds these parameters may be properly selected which shall depend mainly on material of components, their thicknesses, type and size of electrodes. Apart from proper setting of welding parameters, component should be properly cleaned so that surfaces to be welded are free from rust, dust, oil and grease. For this purpose components may be given pickling treatment i.e. dipping in diluted acid bath and then washing in hot water bath and then in the cold water bath. After that components may be dried through the jet of compressed air. If surfaces are rust free then pickling is not required but surface cleaning can be done through some solvent such as acetone to remove oil and grease.

The current may be obtained from a single phase step down transformer supplying alternating current. hree phase rectifier may be used to obtain DC supply and

ctrical and thermal conductivities with sufficient strength

to sustain high pressure at elevated temperatures. Commonly used electrode materials are pure copper and copper base alloys. Copper base alloys may consist of copper as base and alloying elements such as cadmium or silver or chromium or nickel or beryllium or cobalt or zirconium or tungsten. Pure tungsten or tungsten-silver or tungsten-copper or pure molybdenum may also be used as electrode material. To reduce wear, tear and deformation of electrodes, cooling through water circulation is required. Figure 11.1 shows the water cooling system of electrodes.

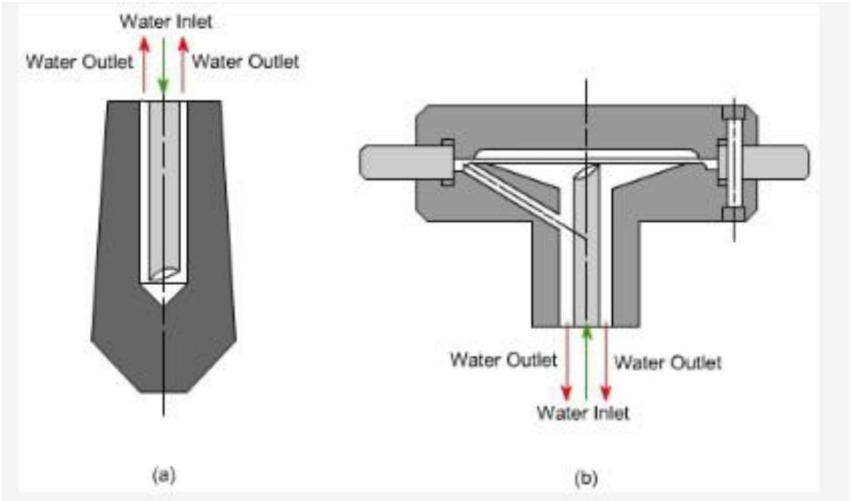

Water Cooling Electrodes a)Spot Welding b) Seam Welding

Commonly used resistance welding processes are spot, seam and projection welding which produce lap joints except in case of production of welded tubes by seam welding where edges are in butting position. In butt and flash welding, components are in butting position and butt joints are produced.

Spot Welding

In resistance spot welding, two or more sheets of metal are held between electrodes through which welding current is supplied for a definite time and also force is exerted on work pieces. The principle is illustrated in Figure 11.2.

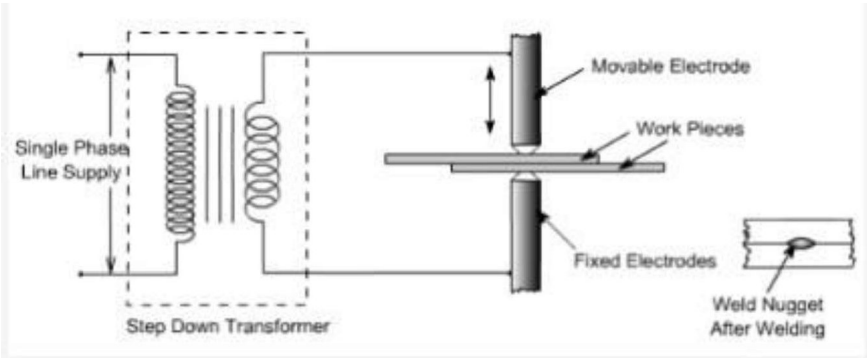

Spot Welding

The welding cycle starts with the upper electrode moving and contacting the work pieces resting on lower electrode which is stationary. The work pieces are held under pressure and only then heavy current is passed between the electrodes for preset time. The area of metals in contact shall be rapidly raised to welding temperature, due to the flow of current through the contacting surfaces of work pieces. The pressure between electrodes, squeezes the hot metal together thus completing the weld. The weld nugget formed is allowed to cool under pressure and then pressure is released. This total cycle is known as resistance spot welding cycle and illustrated in Figure 11.3

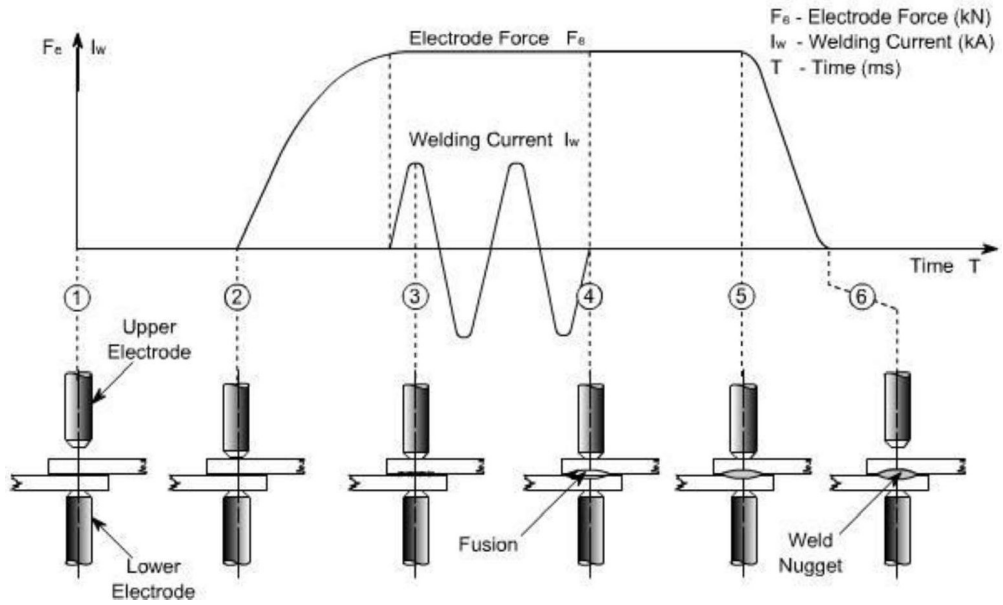

Spot welding electrodes of different shapes are used. Pointed tip or truncated cones with an angle of 120° - 140° are used for ferrous metal but with continuous use they may wear at the tip. Domed electrodes are capable of withstanding heavier loads and severe heating without damage and are normally useful for welding of nonferrous metals. The radius of dome generally varies from 50- 100 mm. A flat tip electrode is used where minimum indentation or invisible welds are desired.

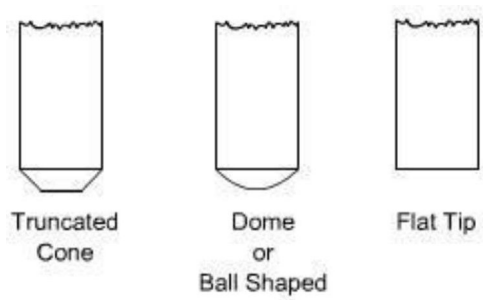

Electrode Shapes for Spot Welding

Most of the industrial metal can be welded by spot welding, however, it is applicable only for limited thickness of components. Ease of mechanism, high speed of operation and dissimilar metal combination welding, has made is widely applicable and acceptable process. It is widely being used in electronic, electrical, aircraft, automobile and home appliances industries.

Seam Welding:

between two wheels or roller disc electrodes and current
. overlapping weld nuggets or intermittent seam i.e. weld
y be continuous or in pulses. The process of welding is

illustrated in Figure 11.5.

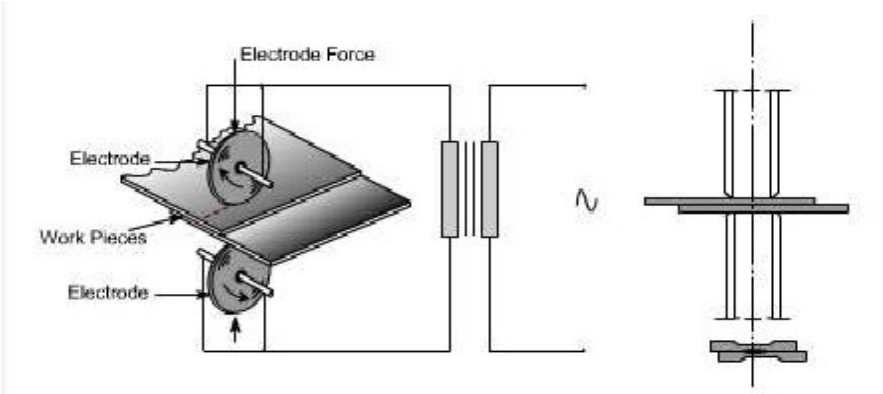

Process of Seam Welding

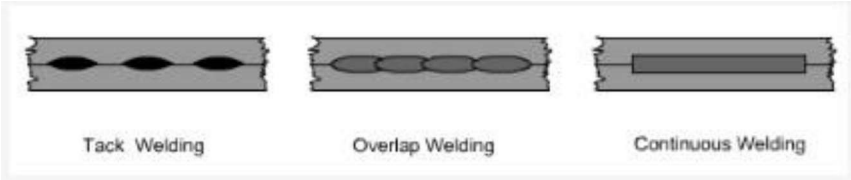

Types of Seam Welds

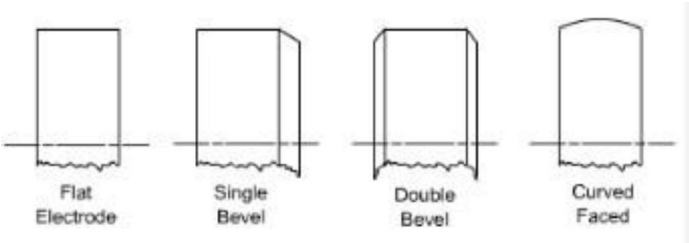

Electrodes shapes of Seam Welding

Overlapping of weld nuggets may vary from 10 to 50 %. When it is approaching around 50 % then it is termed as continuous weld. Overlap welds are used for air or water tightness.

It is the method of welding which is completely mechanized and used for making petrol tanks for automobiles, seam welded tubes, drums and other components of domestic applications. Seam welding is relatively fast method of welding producing quality welds. However, equipment is costly and maintenance is expensive. Further, the process is limited to components of thickness less than 3 mm.

Projection Welding:

Projections are little projected raised points which offer resistance during passage of current and thus generating heat at those points. These projections collapse under heated conditions and pressure leading to the welding of two parts on cooling. The operation is performed on a press welding machine and components are put between water cooled copper platens under pressure. Figures 11.8 and 11.9 illustrate the principle of resistance projection welding.

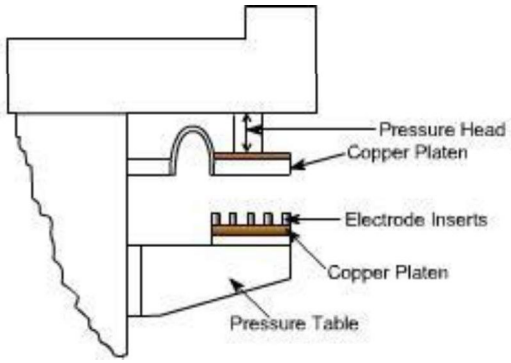

Resistance Projection welding Machine

These projections can be generated by press working or machining on one part or by putting some external member between two parts. Members such as wire, wire ring, washer or nut can be put between two parts to generate natural projection. Insert electrodes are used on copper platen so that with continuous use only insert electrodes are damaged and copper platen is safe. Relatively cheaper electrode inserts can be easily replaced whenever these are damaged.

Formation of Welds from Projections on Components

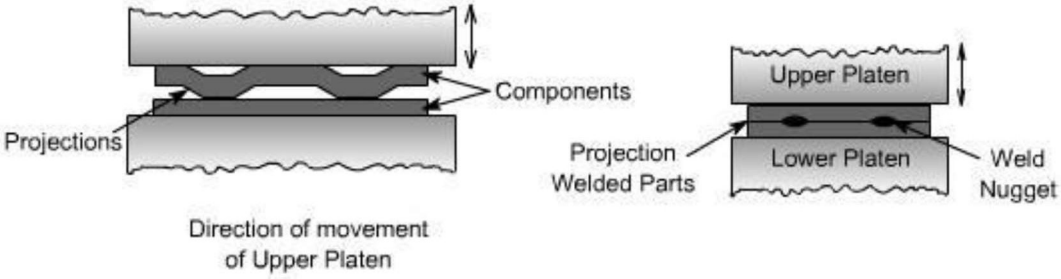

Projection welding may be carried out with one projection or more than one projections simultaneously. No consumables are required in projection welding. It is widely being used for fastening attachments like brackets and nuts etc to sheet metal which may be required in electronic, electrical and domestic equipment.

Production of seam welded Tubes:

Welded tubes are produced by resistance seam welding. Tubes are produced from strips which are wrapped on spool with trimmed edges. The width of strip should be slightly bigger than the periphery of

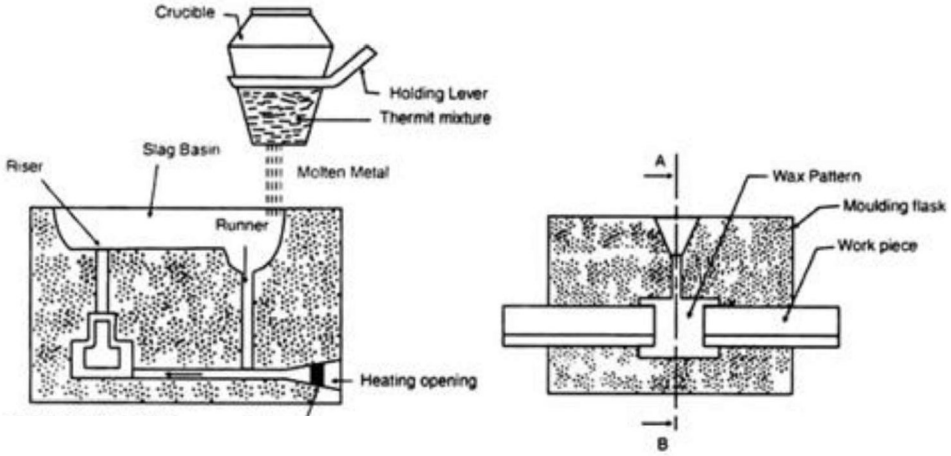

The tube to be produced to take care for the loss of metal in flashout. The strip is fed through set of forming rollers to form first the shape of the tube and then it is passed under the seam welding rolls. Under seam welding rolls the edges are butt welded with some flash out on the joint. This flash out is trimmed and then tubes are cut to required size. The process is shown in Figures 11.10 & 11.11.

Forming of Tube from Strip

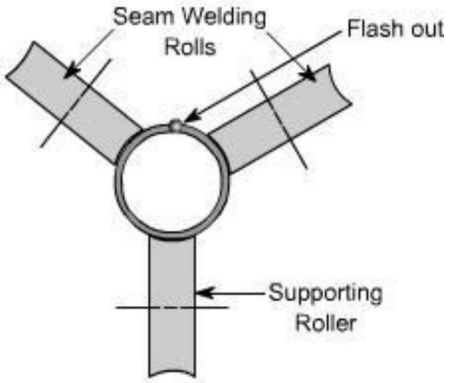

Seam Welding of Tube

Thermit Welding:

After reading this article you will learn about:- 1. Process of Thermit Welding 2. Operation of Thermit Welding 3. Application and Uses 4. Advantages 5. Disadvantages.

Process of Thermit Welding:

Thermit welding is a chemical welding process in which an exothermic chemical reaction is used to supply the essential heat energy. That reaction involves the burning of Thermit, which is a mixture of fine aluminum powder and iron oxide in the ratio of about 1:3 by weight.

Although a temperature of 3000°C may be attained as a result of the reaction, preheating of the Thermit mixture up to about 1300°C is essential in order to start the reaction.

The mixture reacts according to the chemical reaction:

$8\,Al + 3\,Fe_3O_4 \rightarrow 9\,Fe + 4\,Al_2O_3$ + heat (3000°C, 35 kJ/kg of mixture).

Aluminum has greater affinity to react with oxygen; it reacts with ferric oxide to liberate pure iron and slag of aluminum oxide. Aluminum oxide floats on top of molten metal pool in the form of slag and pure iron (steel) settled below, because of large difference in densities.

Operation of Thermit Welding:

ADVERTISEMENTS:

Thermit welding process is essentially a casting and foundry process, where the metal obtained by the Thermit reaction is poured into the refractory cavity made around the joint.

1. The two pieces of metal to be joined are properly cleaned and the edge is prepared.
2. Then the wax is poured into the joint so that a wax pattern is formed where the weld is to be obtained.
3. A moulding box is kept around the joint and refractory sand is packed carefully around the wax pattern as shown in Fig. 7.40, providing the necessary pouring basin, sprue, and riser and gating system.
4. A bottom opening is provided to run off the molten wax. The wax is melted through this opening which is also used to preheat the joint. This makes it ready for welding.
5. The Thermit is mixed in a crucible which is made of refractory material that can withstand the extreme high heat and pressure, produced during the chemical reaction.
6. The igniter (normally barium peroxide or magnesium) is placed on top of the mixture and is lighted with a red hot metal rod or magnesium ribbon.
7. The reaction takes about 30 seconds and highly super-heated molten iron is allowed to flow into the prepared mould cavity around the part to be welded.
8. The super-heated molten metal fuses the parent metal and solidifies into a strong homogeneous weld.
9. The weld joint is allowed to cool slowly.

There are different Thermit mixtures available for welding different metals, such as copper and chromium. They use different metal oxides in place of ferrous oxide. Some typical Thermit mixture reactions with their temperature obtained are given below:

$3CuO + 2Al \rightarrow 3Cu + Al_2O_3$ + Heat (4860°C, 275 Kcal) $Cr_2O_3 + 2Al$

$\rightarrow 2Cr + Al_2O_3$ + Heat (3000°C, 540 Kcal)

Application and Uses of Thermit Welding:

Thermit welding is a very old process and now-a-days, in most cases, it is replaced by electro-slag welding. However, this process is still in use.

Some applications are:

- Thermit welding is traditionally used for the welding of very thick and heavy plates.
- Thermit welding is used in joining rail roads, pipes and thick steel sections.
- Thermit welding is also used in repairing heavy castings and gears.
- Thermit welding is suitable to weld large sections such as locomotive rails, ship hulls etc.
- Thermit welding is used for welding cables made of copper.

Advantages of Thermit Welding:

- Thermit welding is a simple and fast process of joining similar or dissimilar metals.
- This process is cheap, as no costly power supply is required.
- This process can be used at the places where power supply is not available.

Disadvantages of Thermit Welding:

metal parts of heavy sections.

nd light parts.

Plasma Arc Welding

Introduction The plasma arc welding (PAW) can be considered as an advanced version of TIG welding. Like TIGW, PAW also uses the tungsten electrode and inert gases for shielding of the molten metal. Low velocity plasma and diffused arc is generated in the TIG welding while in case of PAW very high velocity and coherent plasma is generated. Large surface area of the arc exposed to ambient air and base metal in case of TIG welding causes greater heat losses than PAW and lowers the energy density. Therefore, TIG arc burns at temperature lower than plasma arc.

Principle of PAW

In plasma arc welding, arc is forced to pass through nozzle (water cooled copper) which causes the constriction of the arc (Fig. 16.5). Constriction of arc results in (a) reduction in cross-sectional area of arc, (b) increases (d) increases energy density and (c) increases to velocity of plasma approaching to the sound velocity and temperature to about 25000 0 C. these factors together make PAW, a high energy density and low heat input welding process therefore; it poses fewer which in turn reduces problems associated with weld thermal cycle.

Constriction of arc increases the penetration and reduces the width of weld bead. Energy associated with plasma depends on plasma current, size of nozzle, plasma gas (Fig. 16.6). A coherent, calumniated and stiff plasma is formed due to constriction therefore it doesn't get deflected and diffused. Hence, heat is transferred to the base metal over a very small area which in turns results in high energy density and deep of penetration and small width of the weld pool / key hole / cut. Further, stiff and coherent plasma makes it possible to work having stable arc with very low current levels (<15A) which inturn has led to micro-plasma system.

Energy density and penetration capability of plasma jet is determined by the various process parameters namely plasma current, nozzle orifice diameter and shape, plasma forming gas (Air, He, Ar) and flow rate of plasma carrying. Increasing plasma current, flow rate, thermal conductivity of plasma forming gas and reducing nozzle orifice diameter increases together result in the energy density and penetration capability of plasma jet. In general, the plasma cutting uses high energy density in combination with high plasma velocity and high flow rate of high thermal conductivity plasma forming gas. A combination of such characteristics for plasma cutting is achieved by controlling above process parameters. Further, thermal conductivity of plasma forming gas must be high enough for cutting operation so that heat can be

effectively transferred rapidly to the base metal. Plasma welding needs comparatively low energy density and low velocity plasma to avoid melt through or blowing away tendency of molten metal.

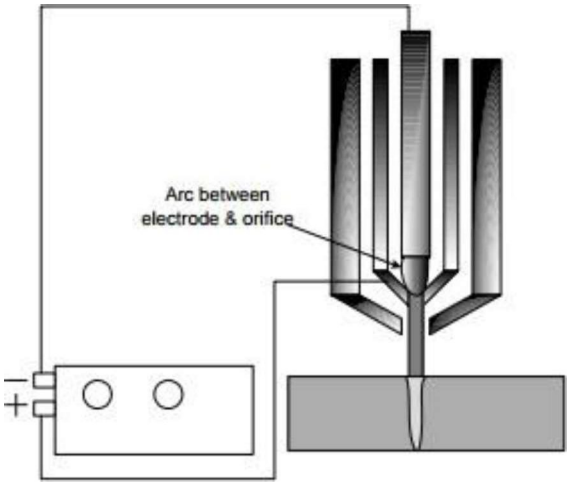

Schematic of plasma arc welding system showing important components

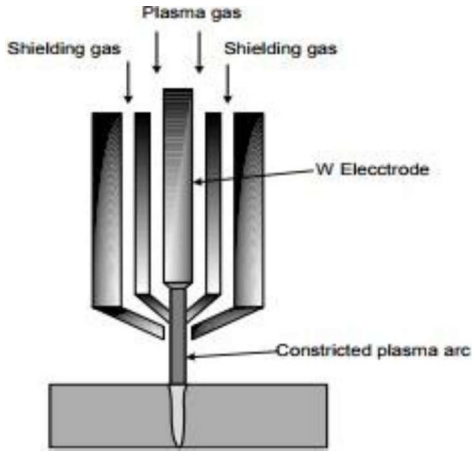

Schematic of constriction of arc in PAW

High energy density associated with plasma arc produces a temperature of order of 25,000 0 C. This process uses the heat transferred by plasma (high temperature charged gas column) produced by a gas (Ar, Ar-H2 mixture) passing through an electric arc, for melting of faying surfaces. Inert gas (Ar, He) is used to protect the molten weld pool from the atmospheric gases. Charged particles (electrons and ions) formed as a result of ionization of plasma gas tends to reunite when they strike to the surface of work piece. Recombination of charged particles liberates heat which is also used in melting of base metal. Electric arc can be produced between nonconsumable electrode and work-piece or non-consumable electrode and nozzle. As discussed above, plasma arc welding uses two types of gases one is called plasma gas and other is inert gas primarily for shielding the weld pool from the contamination by atmospheric gases. Plasma gas is primarily used to develop plasma by passing through arc zone and transfer the heat to the weld pool.

PAW uses the constant current type power source with DCEN polarity. The DCEN polarity is invariable used in PAW because tungsten electrode is used for developing the arc through which plasma forming gas is passed. Tungsten electrode has good electron emitting capability therefore it is made cathode. Further, electrode during welding as about one third of total heat ird of arc heat is generated at the anode side i.e. work-

piece. DCEP polarity does not help the process in either way. Current can vary from 2-200 A.
The plasma arc in PAW is not initiated by the conventional touch start method but it heavily depend on use of high frequency unit. Plasma is generated using two cycles approach a) producing very small high-intensity spark (pilot arc) within the torch body by imposing pulses of high voltage, high frequency and low current about 50A (from HF unit) between the electrode and nozzle which in turn generates a small pocket of plasma gas and then as soon as torch approaches the work-piece main current starts flowing between electrode and job leading to the ignition of the transferred arc. At this stage pilot is extinguished and taken off the circuit.

Types of PAW Plasma generated due to the arc between the non-consumable electrode and workpiece is called transferred plasma whereas that due to arc between non-consumable electrode and nozzle is called non-transferred plasma. Non-transferred plasma system to a large extent becomes independent of nozzle to work piece distance.
Transferred plasma offers higher energy density than non-transferred plasma and therefore it is preferred for welding and cutting of high speed steel, ceramic, aluminium etc. Non-transferred plasma is usually applied for welding and thermal spray application of steel and other common metals. Depending upon the current, plasma gas flow rate, and the orifice diameter following variants of PAW has been developed such as:

- Micro-plasma (< 15 Amperes)
- Melt-in mode (15–400 Amperes) plasma arc
- Keyhole mode (>400 Amperes) plasma arc

Micro-plasma welding systems work with very low plasma forming current (generally lower than 15 A) which in turn results in comparatively low energy density and low plasma velocity. These conditions become good enough to melt thin sheet for plasma welding.

Plasma for melt-in mode uses somewhat higher current and greater plasma velocity than micro- plasma system for welding applications. This is generally used up to 2.4 mm thickness sheet. For thickness of sheet greater than 2.5 mm normally welding is performed using key-hole technique. The key hole technique uses high current and high pressure plasma gas to ensure key-hole formation. High energy density of plasma melts the faying surfaces of base metal and high pressure plasma jet pushes the molten metal against vertical wall created by melting of base metal and developing key-hole. Plasma velocity should be such that it doesn't push molten metal out of the hole. The key is formed under certain combination of plasma current, orifice gas flow rate and velocity of plasma welding torch and any disturbance to above parameters will cause loss of key-hole. For key-holing, flow rate is very crucial and therefore is controlled accurately + 0.14 liter/min. Nozzles are specified with current and flow rate.

Advantage of PAW
With regard to energy density, PAW stands between GTAW/GMAW and EBW/LBW accordingly it can be used using melt-in mode and key-hole mode. Melt-in mode results in greater heat input and higher width to depth of weld ratio than key-hole mode. Higher energy density associated with PAW than GTAW produces narrow heat affected zone and lowers residual stress and distortion related problems. High depth to width ratio of weld produced by PAW reduces the angular distortion. It generally uses about one
for same thickness therefore it can be effectively applied
nsferred plasma offers flexibility of variation in standoff

distance between nozzle and work- piece without extinction of the arc.

Limitation of PAW

Infrared and ultra-violet rays generated during the PA welding are found harmful to human being. High noise (100dB) associated with PAW is another undesirable factor. PAW is a more complex, costlier, difficult to operate than GTAW besides generating high noise level during welding. Narrow width of the PAW weld can be problematic from alignment and fit-up point of view. Productivity of the PAW in respect of welding speed is found lower than LBW.

Oxy-Fuel Gas Cutting:

This is the most frequently employed thermal cutting process used for low carbon and low alloy steel plates and often referred to as 'flame cutting' or 'gas cutting'. It can be used to cut steel upto 2 m thick. Oxy-fuel gas process involves preheating a small zone, wherefrom the cut is to be started, to the kindling temperature of the material. Compressed oxygen is then made to impinge upon the hot metal resulting in very high rate of oxidation which is often accompanied by evolution of heat due to exothermic nature of the reaction.

The fuel gas employed is generally acetylene but propane, LPG (liquefied petroleum gas), natural gas, or methylacetylene propadiene stabilised (MAPP or MPS) may also be employed depending upon availability and cost considerations.

The torch employed for oxy-acetylene cutting is shown in Fig. 19.2. It has a mixing chamber for oxygen and acetylene as in a welding torch. But after mixing the gas mixture flows out of the torch nozzle through a number of small holes placed in a circle around the central hole through which a stream of high pressure pure oxygen can be made to flow by pressing a lever on the torch handle. The diameter of these holes vary and increases with increase in thickness of the material to be cut.

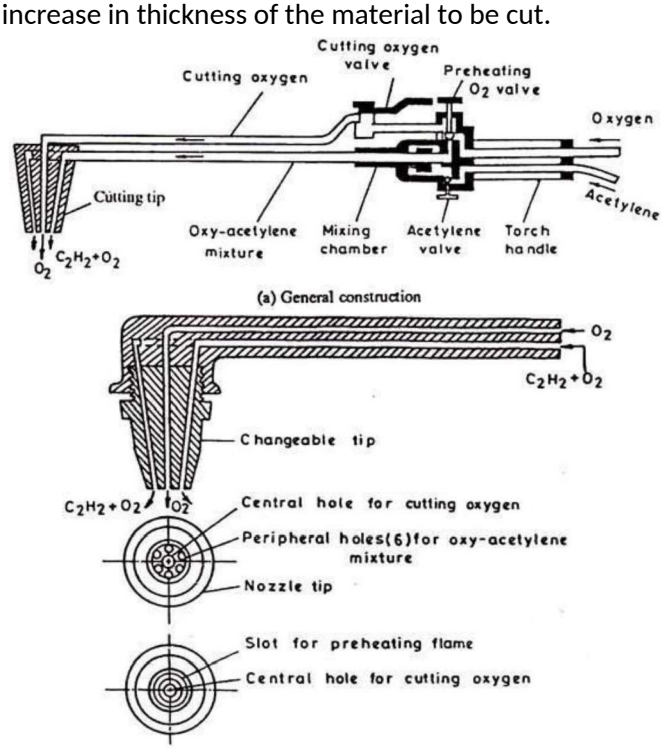

Fig. 19.2 Gas cutting torch and types of tips.

When the material to be cut is raised to its kindling temperature* (which is 870 to 950°C for low carbon

d high pressure pure oxygen reacts with it, the following

erials.

1. $Fe + O \rightarrow FeO + heat$ (267 KJ)……(1)
2. $2Fe + 1.5O_2 \rightarrow Fe_2O_3 + heat$ (825 KJ)……(2)
3. $3Fe + 2O_2 \rightarrow Fe_3O_4 + heat$ (1120KJ)……(3)

Mainly third reaction takes place with tremendous release of heat. Second reaction occurs to some extent in cutting of heavier sections only. Theoretically 0.29 m^3 of O_2 will oxidise 1 kg of iron to form Fe_3O_4. However, in practice the consumption of oxygen is higher than this value for plate thickness less than 40 mm and it is lower for higher thicknesses, being the least for the thickness range of 100 to 125 mm.
The exothermic reaction between O_2 and Fe generates enough heat to continue the thermal cutting process without the use of preheating flame using only oxygen but in practice it is not possible because a lot of heat is used up in burning dirt, paint, scale, etc., and a considerable amount is lost by radiation. Also, the high speed jet impinging upon the surface causes cooling action which needs to be compensated by preheating.
The chemical reaction between ferrous and oxygen is rarely complete and the analysis of the blown out material (or slag) often indicates that 30% to 40% of the slag is parent material.

Steel and some other metals can be cut by oxy-acetylene flame if they fulfill the following conditions:

- The melting point of the metal should be higher than its kindling temperature.
- The metal oxide formed by reaction with oxygen should have lower melting point than the melting point of the parent material and it should be fluid in molten state so as to blow out easily.
- It should have low thermal conductivity so that the material can be rapidly raised to its kindling temperature.

When a workpiece is cut by a thermal cutting process, the width of the cut is referred to as KERF, which in oxy-fuel gas process is a function of oxygen hole size in the nozzle tip, flowrate of oxygen and preheating gases, speed of cutting and the nature of the material being cut.

Cutting of Ferrous and Non-Ferrous Metals:
Metal Powder Cutting:
It is an oxygen cutting process in which metal powder (iron or aluminum) is employed to facilitate cutting. This process is used for cutting cast iron, chromium-nickel, stainless steel and some high alloy steels. The working principle of powder cutting is lite injection of metal powder into the oxygen stream well before it strikes the metal to be cut.

The powder is heated by its passage through the oxy-acetylene preheat flames and almost immediately ignites in the stream of cutting oxygen. The powder from a powder dispenser is carried to the lip of the cutting torch by the use of compressed air or nitrogen as shown in Fig. 19.7.

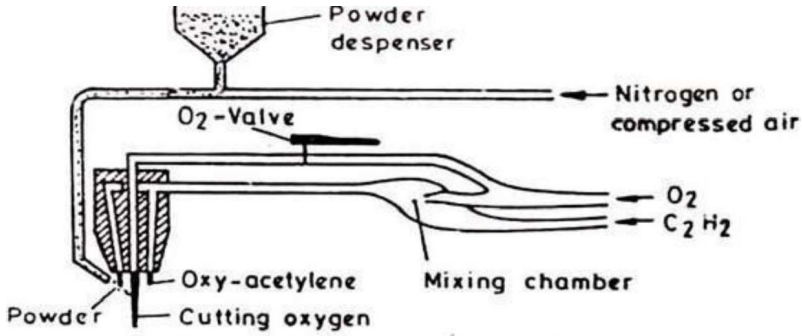

Fig. 19.7 Cutting torch for metal powder cutting.

The ignited powder provides much higher temperature in the stream and that helps in culling the metal in almost the same manner as cutting of low carbon steel. Preheating is not essential for powder cutting.

Cutting speeds and cutting oxygen pressures are similar to those for cutting mild steel; however for cutting material thicker than 25 mm a nozzle one size larger should be used. Flow rates are generally kept at 010 to 0-25 kg of iron powder per minute of cutting. Powder cutting usually leaves a scale on the cut surface which can be easily removed on cooling.

Metal powder culling was initially introduced for cutting stainless steel but has been successfully used for cutting alloy steels, cast iron, bronze, nickel, aluminium, steel mill ladle spills, certain refractories, and concrete. The same basic process can also be used for gouging and scarfing to condition billets, blooms, and slabs in steel mills.

Powder cutting is also useful for stack cutting wherein preheat from an ordinary flame culling is not sufficient on the lower plate(s) either due to large depth or separation between plates. By means of the metal powder and its reaction in the oxygen the cut is completed even across separations. However, powder cutting generates quite a bit of smoke that needs to be removed to safeguard the health of the operator and to avoid interference with other operations in the area.

Process # 3. Chemical Flux Cutting:

In the oxygen-cutting process a chemical flux is injected into the oxygen stream as metal powder is injected in powder cutting. The flux combines with the refractory oxides and makes them a soluble compound. The chemical fluxes may be salts of sodium such as sodium carbonate.

Fig. 19.8 shows one of the setups used for flux cutting. In this method oxygen sucks flux from a hopper at the rate of 0 06 to 0-30 kg per minute and flows through the jet of cutting oxygen.

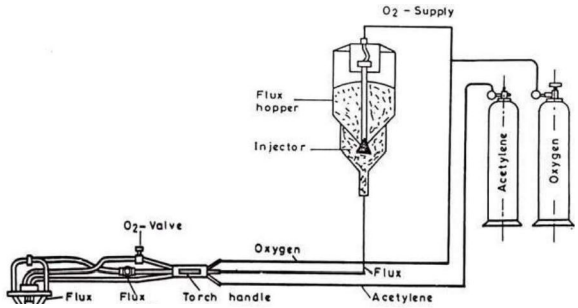

tup for cutting with chemical flux.

ıe initiating point of cut to white heat, the cutting oxygen

valve is then opened half-turn and the flux in oxygen stream is led to the torch. As the molten metal reaches the lower edge of the work, the torch is made to move along the line of the cut and the cutting oxygen valve is fully opened. To halt the operation first flux-supply valve is closed and then the other torch valves are shut-off.

It is advisable to position the flux-supply 10 m away from the cutting area. It should also be ensured that the hoses through which the flux-oxygen mixture is passed have no sharp bends otherwise it may lead to clogging.

This process can be used for cutting cast iron, chromium-steel, chromium-nickel steel, copper, brass and bronze. However, it is not recommended for cutting steels of high-nickel type, for example, 15 Cr 35Ni steel. Chemical flux cutting, however, is slowly losing its industrial importance because of the development of more efficient methods like plasma cutting.

Metal Inert Gas (MIG) welding (also known as Gas Metal Arc Welding [GMAW])

MIG is an arc welding technique in which a consumable electrode is used to weld two or more work pieces. A diagrammatic representation of metal inert gas welding is shown below:

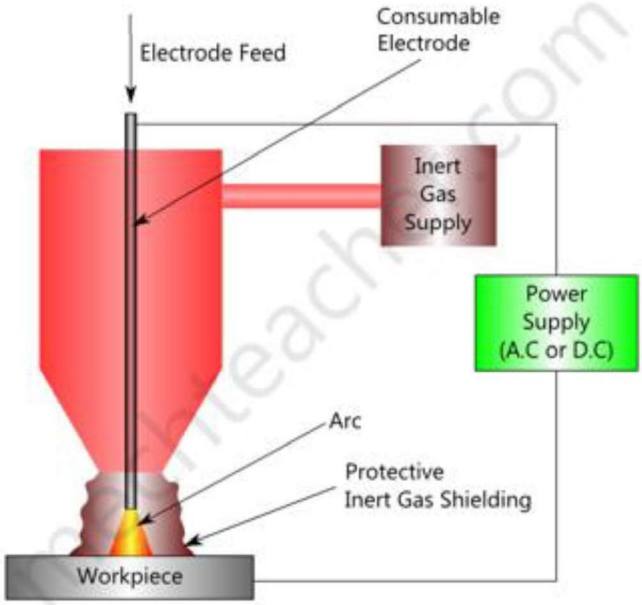

Components used in Metal Inert Gas Welding (MIG Welding):

Metal Inert Gas Welding (MIG Welding) makes use of the following components:

1. Consumable Electrode
2. Inert Gas Supply
3. Welding Head
4. A.C or D.C Power Supply
5. Electrode Feeding Mechanism Working:

The workpiece to be welded and the consumable electrode (in the form of wire) are connected to the Power Supply (D.C or A.C). Whenever the consumable electrode is brought near the workpiece (with a small air gap), an arc is produced. This arc melts the electrode. The melted electrode fills uniformly over the

rode (hence the name 'Metal Inert Gas Welding') during

the welding process. It forms a gas shield around the arc and the weld (See the diagram above). This is intended to protect the weld from the external atmosphere. The type of electrode used and the shielding gas used primary depends on the material to be welded. In many cases the shielding gas used is a mixture of many gases.

If many workpieces are to be welded continuously an electrode spool (in the form of coil) is used. Consumable electrode is continuously supplied from this spool by a suitable feeding mechanism. Commonly, servo mechanisms are used for feeding long electrodes. In MIG Welding, consumable electrode itself acts as filler metal. So, no seperate filler rod or filler wire is needed.

Advantages of Metal Inert Gas Welding (MIG Welding):

1. Consumable electrodes are easy to feed.
2. No filler rod is needed.
3. Welding is simple.
4. Inert gas shield protects the weld automatically.

Disadvantages of Metal Inert Gas Welding (MIG Welding):

1. Improper welding may lead to the floating of solid impurities over the liquid weld.
2. If not handled properly, weld may become porous.
3. MIG Welding exposes welders to hazardous gases.
4. Care must be taken to avoid the formation of less ductile welds.
5. Work pieces and Electrodes should be kept clean before welding.

TIG Welding

Tungsten Inert Gas (TIG) or Gas Tungsten Arc (GTA) welding is the arc welding process in which arc is generated between non-consumable tungsten electrode and work piece. Thetungsten electrode and the weld pool are shielded by an inert gas normally argon and helium. Figures 10.1 & 10.2 show the principle of tungsten inert gas welding process.

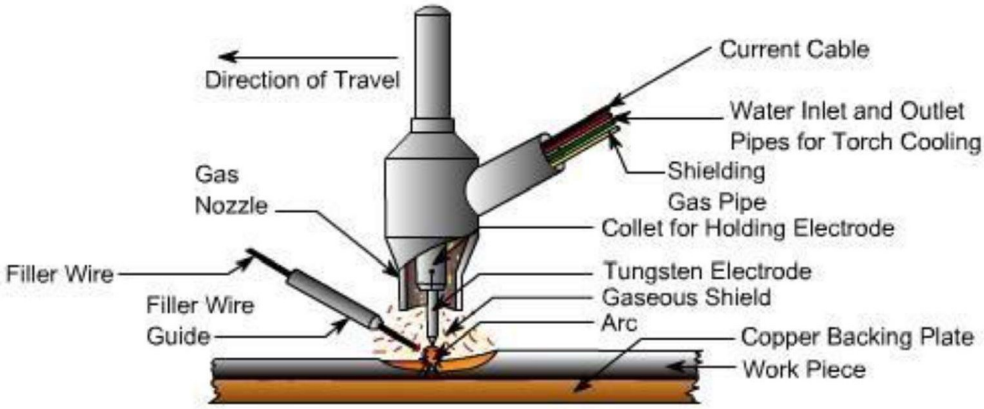

Principle of TIG Welding.

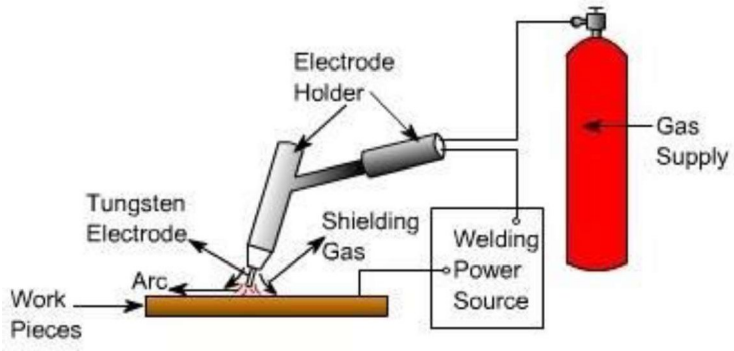

Schematic Diagram of TIG Welding System.

The tungsten arc process is being employed widely for the precision joining of critical components which require controlled heat input. The small intense heat source provided by the tungsten arc is ideally suited to the controlled melting of the material. Since the electrode is not consumed during the process, as with the MIG or MMA welding processes, welding without filler material can be done without the need for continual compromise between the heat input fromthe arc and the melting of the filler metal. As the filler metal, when required, can be added directly to the weld pool from a separate wire feed system or manually, all aspects of the process can be precisely and independently controlled i.e. the degree of melting of the parent metal is determined by the welding current with respect to the welding speed, whilst the degree of weld bead reinforcement is determined by the rate at which the filler wire is added to the weld pool.

In TIG torch the electrode is extended beyond the shielding gas nozzle. The arc is ignited by high voltage, high frequency (HF) pulses, or by touching the electrode to the workpiece and withdrawing to initiate the arc at a preset level of current. Selection of electrode composition and size is not completely independent and must be considered in relation to the operating mode and the current level. Electrodes for DC welding are pure tungsten or tungsten with 1 or 2% thoria, the thoria being added to improve electron emission which facilitates easy arc ignition. In AC welding, where the electrode must operate at a higher temperature, a pure tungsten or tungsten-zirconia electrode is preferred as the rate of tungsten loss is somewhat lesser than with thoriated electrodes and the zirconia aids retention of the 'balled' tip. Table below indicates the chemical composition of tungsten electrodes as per American Welding Society (AWS) classification.

Chemical Composition of TIG Electrodes

AWS Classification	Tungsten, min. percent	Thoria, percent	Zirconia, percent	Total other elements, max. percent
EWP	99.5	-	-	0.5
EWTh-1	98.5	0.8 to 1.2	-	0.5
EWTh-2	97.5	1.7 to 2.2	-	0.5
EWZr	99.2	-	0.15 to 0.40	0.5

m 0.5 mm to 6.4 mm diameter and 150 - 200 mm length.
trode depends on whether it is connected to negative or

positive terminal of DC power source. AC is used only in case of welding of aluminum and magnesium and their alloys. Table 10.2 gives typical current ranges for TIG electrodes when electrode is connected to negative terminal (DCEN) or to positive terminal (DCEP).

Typical Current Ranges for TIG Electrodes

Electrode Dia. (mm)	DCEN	DCEP
	Pure and Thoriated Tungsten	Pure and Thoriated Tungsten
0.5	5-20	-
1.0	15-80	-
1.6	70-150	10-20
2.4	150-250	15-30
3.2	250-400	25-40
4.0	400-500	40-55
4.8	500-750	55-80
6.4	750-1000	80-125

The power source required to maintain the TIG arc has a drooping or constant current characteristic which provides an essentially constant current output when the arc length is varied over several millimeters. Hence, the natural variations in the arc length which occur in manual welding have little effect on welding current. The capacity to limit the current to the set value is equally crucial when the electrode is short circuited to the workpiece, otherwise excessively high current shall flow, damaging the electrode. Open circuit voltage of power source ranges from 60 to 80 V. Argon or helium may be used successfully for most applications, with the possible exception of the welding of extremely thin material for which argon is essential. Argon generally provides an arc which operates more smoothly and quietly, is handled more easily and is less penetrating than the arc obtained by the use of helium. For these reasons argon is usually preferred for most applications, except where the higher heat and penetration characteristic of helium is required for welding metals of high heat conductivity in larger thicknesses. Aluminum and copper are metals of high heat conductivity and are examples of the type of material for which helium is advantageous in welding relatively thick sections.

Pure argon can be used for welding of structural steels, low alloyed steels, stainless steels, aluminum, copper, titanium and magnesium. Argon hydrogen mixture is used for welding of some grades of stainless steels and nickel alloys. Pure helium may be used for aluminum and copper. Helium argon mixtures may be used for low alloy steels, aluminum and copper.

TIG welding can be used in all positions. It is normally used for root pass(es) during welding of thick pipes but is widely being used for welding of thin walled pipes and tubes. This process can be easily mechanised i.e. movement of torch and feeding of filler wire, so it can be used for precision welding in nuclear, aircraft, chemical, petroleum, automobile and space craft industries. Aircraft frames and its skin, rocket body and engine casing are few examples where TIG welding is very popular.

Friction welding works on basic principle of friction. In this welding process, the friction is used to generate heat at the interference surface. This heat is further used to join two work pieces by applying external pressure at the surface of work piece. In this welding process, the friction is applied until the plastic forming temperature is achieved. It is normally 900-1300 degree centigrade for steel. After this heating phase, a uniformly increasing pressure force applied until the both metal work pieces makes a permanent joint. This joint is created due to thermo mechanical treatment at the contact surface.

Working:

There are many types of friction welding processes which works differently. But all different these processes involves common a working principle which can be summarize as follow.

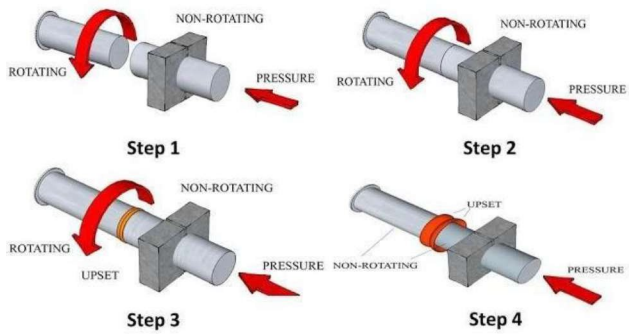

Friction Welding

- First both the work pieces are prepared for smooth square surface. One of them is mounted on a rotor driven chuck and other one remains stationary.
- The rotor allows rotating at high speed thus it makes rotate mounted work piece. A little pressure force is applied on the stationary work piece which permits cleaning the surface by burnishing action.
- Now a high pressure force applied to the stationary work piece which forces it toward rotating work piece and generates a high friction force. This friction generates heat at the contact surface. It is applied until the plastic forming temperature is achieved.
- When the temperature is reached the desire limit, the rotor is stopped and the pressure force is applied increasingly until the whole weld is formed.

This welding is used to weld those metals and alloys which cannot be welded by other method

Types:

Continuous induce friction welding:

This welding is same as we discussed above. In this welding process, the rotor is connected with a band **brake**. When the friction crosses the limit of plastic temperature, the band brake comes into action which stops the rotor but the pressure applied on the work piece increasingly until the weld is formed.

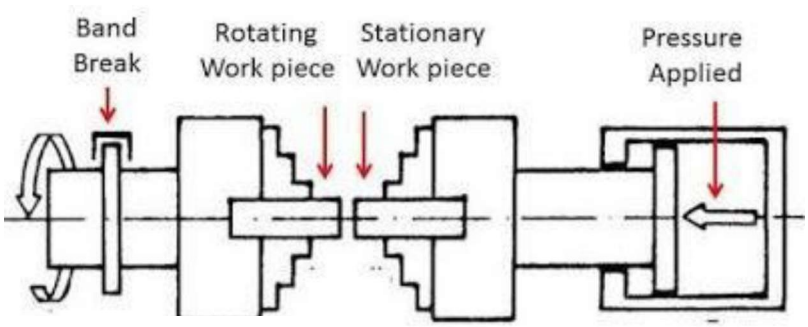

riction welding:

In this type of friction welding the band brake is replaced by the **engine** flywheel and shaft flywheel. These flywheels connect chuck to the motor. In the starting of the welding, both flywheels are connected with one another. When the speed or friction reaches its limit, the engine flywheel separated from the shaft flywheel. Shaft flywheel has low moment of inertia which stops without brake. The pressure force is continuously applied to the work piece until the weld is formed.

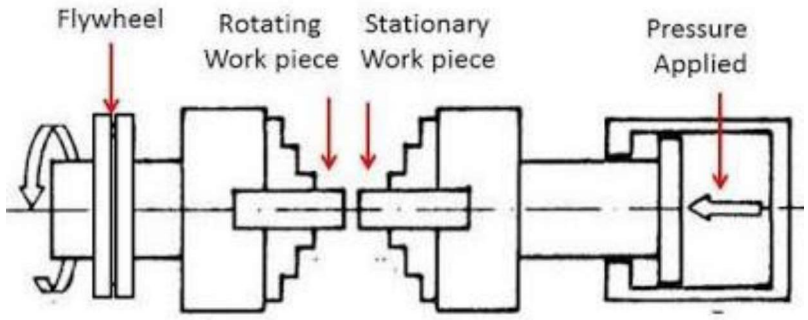

Application:

- For welding tubes and shafts.
- It is mostly used in aerospace, **automobile**, marine and oil industries.
- Gears, axle tube, valves, **drive line** etc. components are friction welded.
- It is used to replace **forging** or **casting** assembly.
- Hydraulic piston rod, truck rollers bushes etc. are join by friction welding.
- Used in electrical industries for welding copper and aluminum equipment's.
- Used in pump for welding pump shaft (stainless steel to carbon steels).
- Gear levers, drill bits, connecting rod etc. are welded by friction welding.

Advantages and Disadvantages:

Advantages:

- It is environment friendly process without generation smoke etc.
- Narrow heat affected zone so no change in properties of heat sensitive material.
- No filler metal required.
- Welding strength is strong in most cases.
- Easily automated.
- High welding speed.
- High efficiency of weld.
- Wide variety of metal can be weld by this process.

Disadvantages:

- This is mostly used only for round bars of same cross section.
- Non-forgeable material cannot be weld.
- Preparation of work piece is more critical
- High setup cost.
- Joint design is limited.

This is all about friction welding principle, working, types, application, advantages and disadvantages. If you have any query regarding this article, ask by commenting. If you like this article, don't forget to share it on your social networks. Subscribe our website for more interesting articles.

Explosive Welding:

Principle:

This welding process works on basic principle of metallurgical bonding. In this process, a controlled detonation of explosive is used on the welding surface. This explosion generates a high pressure force, which deform the work plates plastically at the interface. This deformation forms a metallurgical bond between these plates. This metallurgical bond is stronger than the parent materials. The detonation process occurs for a very short period of time which cannot damage the parent material. This is basic principle of explosion welding. This welding is highly depend on welding parameters like standoff distance, velocity of detonation, surface preparation, explosive etc. This welding is capable to join large area due to high energy available in explosive.

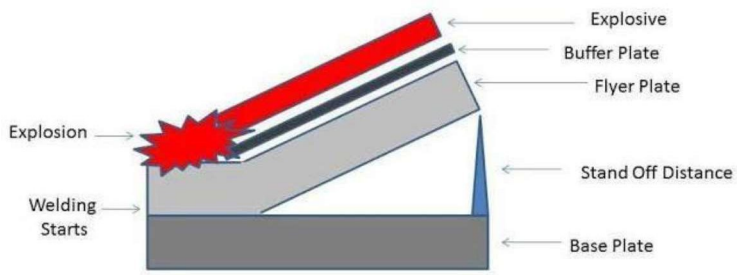

Explosion Welding

Basic terminology:

Base Plate: This is one of the welding plate which is kept stationary on a avail. It involves a backer which supports the base plate and minimizes the distortion during the explosion.

Flyer Plate: This is another welding plate which is going to be weld on base plate. It has lowest density and tensile yield strength compare to base plate. It is situated parallel or at an angle onthe base plate.

Buffer Plate: Buffer plate is situated on the flyer plate. This plate is used to minimize the effect or explosion on upper surface of flyer plate. This protects the flyer plate from any damage due to explosion.

Standoff distance: Stand-off distance plays a vital role in explosion welding. It is distance between flyer plate and base plate. Generally it is taken double of thickness of flyer plate for thin plates and equal to thickness of flyer plate for thick plates.

Explosive: Explosive is placed over the flyer plate. This explosive is situated in a box structure. This box placed on the flyer plate. Mostly RDX, TNT, Lead azide, PETN etc. used as explosive.

Velocity of detonation: It is the rate at which the explosive detonate. This velocity should be kept less than 120% of sonic velocity. It is directly proportional to explosive type and its density.

Types:

This welding can be classified into two types according to the setup configuration.

Oblique Explosion Welding:

In this type of welding process base plate is fixed on an anvil and filler plate makes an angle with the base plate. This welding configuration is used to join thin and small plates.

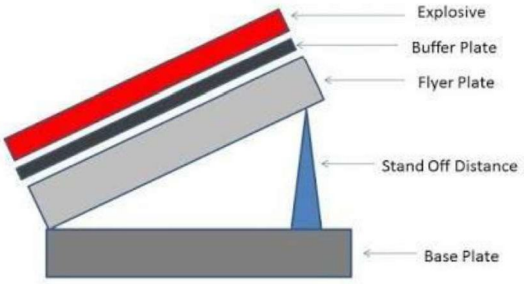

Oblique Explosion Welding

Parallel Explosion Welding:

As the name implies, in this welding configuration filler plate is parallel to the base plate. There is some standoff distance between base plate and flyer plate. This configuration is used to weld thick and large plates.

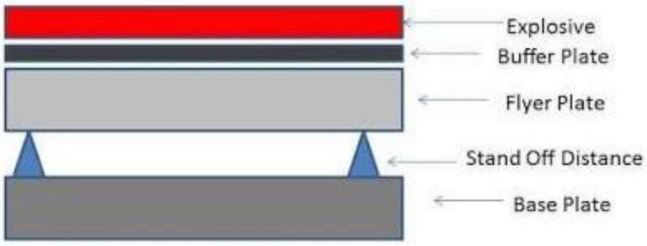

Parallel Explosion Welding

Working:

We have discussed about working principle of explosion welding. Its working can be summarized as follow.

- First both the flyer plate and the base plate interface surface are cleaned and prepared for good weld.
- Now the base plate fixed on the avail and the flyer plate place at the top surface of it at a pre- define distance (stand-off distance). The flyer plate may be inclined or parallel according to the welding configuration.
- The buffer plate is set over the flyer plate. This plate protects the upper surface of flyer place from damage due to high impact force of explosion.
- The prepared explosive is place into a box of same size of welding surface. This box is placed over buffer plate. There is a detonator at one side of the explosive. This is used to start explosion.
- Now the detonator ignited the explosive which create a high pressure wave. These waves deforms the interface surface plastically and form a metallurgical bond between base plate and flyer plate. This bond is stronger than parent material.

Application:

ninum to stainless steel.

e pipe, concentric cylinder, tube etc.

- Weld clad sheet with steel in a heat exchanger.
- Join dissimilar metals which cannot be weld by other welding process.
- For joining cooling fan etc.

Advantages and Disadvantages:

Advantages:

- It can join both similar and dissimilar material.
- Simple in operation and handling.
- Large surface can be weld in single pass.
- High metal joining rate. Mostly time is used in preparation of the welding.
- It does not effect on properties of welding material.
- It is solid state process so does not involve any filler material, flux etc.

Disadvantages:

- It can weld only ductile metal with high toughness.
- It creates a large noise which produces noise Pollution.
- Welding is highly depends on process parameters.
- Higher safety precautions involved due to explosive.
- Designs of joints are limited.

This is all about explosion welding principle, working, types, application, advantages and disadvantages. If you have any query regarding this article, ask by commenting. If you like this article, don't forget to share it on your social networks. Subscribe our website for more interesting articles.

Welding Defects

The defects in the weld can be defined as irregularities in the weld metal produced due to incorrect welding parameters or wrong welding procedures or wrong combination of filler metal and parent metal. Weld defect may be in the form of variations from the intended weld bead shape, size and desired quality. Defects may be on the surface or inside the weld metal. Certain defects such as cracks are never tolerated but other defects may be acceptable within permissible limits. Welding defects may result into the failure of components under service condition, leading to serious accidents and causing the loss of property and sometimes also life. Various welding defects can be classified into groups such as cracks, porosity, solid inclusions, lack of fusion and inadequate penetration, imperfect shape and miscellaneous defects.

Cracks

Cracks may be of micro or macro size and may appear in the weld metal or base metal or base metal and weld metal boundary. Different categories of cracks are longitudinal cracks, transverse cracks or radiating/star cracks and cracks in the weld crater. Cracks occur when localized stresses exceed the ultimate tensile strength of material. These stresses are developed due to shrinkage during solidification of weld metal.

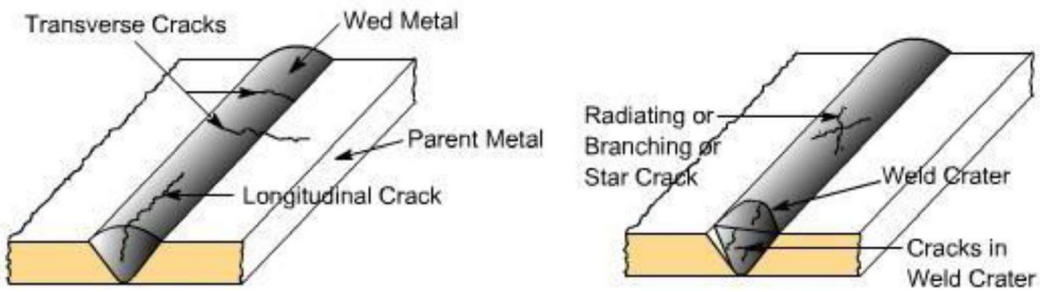

Various Types of Cracks in Welds

Cracks may be developed due to poor ductility of base metal, high sulpher and carbon contents, high arc travel speeds i.e. fast cooling rates, too concave or convex weld bead and high hydrogen contents in the weld metal.

Porosity

Porosity results when the gases are entrapped in the solidifying weld metal. These gases are generated from the flux or coating constituents of the electrode or shielding gases used during welding or from absorbed moisture in the coating. Rust, dust, oil and grease present on the surface of work pieces or on electrodes are also source of gases during welding. Porosity may be easily prevented if work pieces are properly cleaned from rust, dust, oil and grease.Futher, porosity can also be controlled if excessively high welding currents, faster welding speeds and long arc lengths are avoided flux and coated electrodes are properly baked.

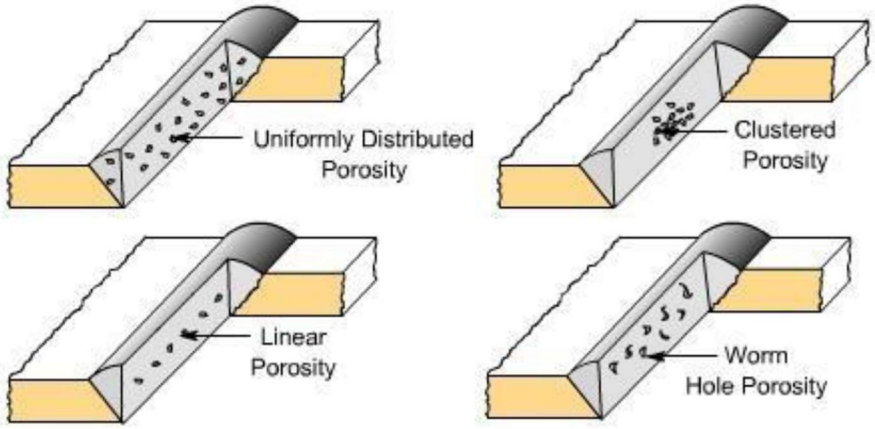

Different Forms of Porosities

Solid Inclusion

Solid inclusions may be in the form of slag or any other nonmetallic material entrapped in the weld metal as these may not able to float on the surface of the solidifying weld metal. During arc welding flux either in the form of granules or coating after melting, reacts with the molten weld metal removing oxides and other impurities in the form of slag and it floats on the surface of weld metal due to its low density. However, if the molten weld metal has high viscosity or too low temperature or cools rapidly then the slag may not be released from the weld pool and may cause inclusion.

Slag inclusion can be prevented if proper groove is selected, all the slag from the previously deposited bead is removed, too high or too low welding currents and long arcs are avoided.

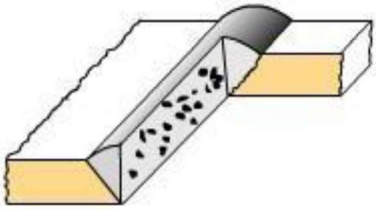

Slag Inclusion in Weldments

Lack of Fusion and Inadequate or incomplete penetration:

Lack of fusion is the failure to fuse together either the base metal and weld metal or subsequent beads in multipass welding because of failure to raise the temperature of base metal or previously deposited weld layer to melting point during welding. Lack of fusion can be avoided by properly cleaning of surfaces to be welded, selecting proper current, proper welding technique and correct size of electrode.

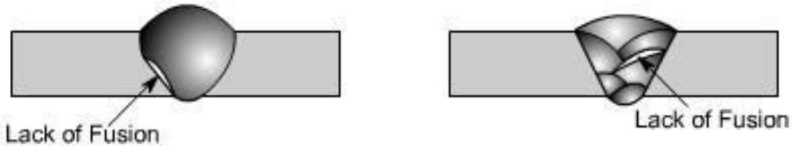

Types of Lack of Fusion

Incomplete penetration means that the weld depth is not upto the desired level or root faces have not reached to melting point in a groove joint. If either low currents or larger arc lengths or large root face or small root gap or too narrow groove angles are used then it results into poor penetration.

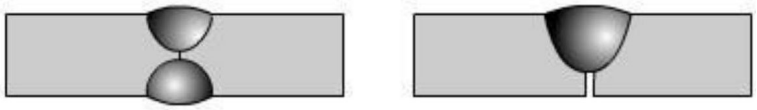

Examples of Inadequate Penetration

Imperfect Shape

Imperfect shape means the variation from the desired shape and size of the weld bead.

During undercutting a notch is formed either on one side of the weld bead or both sides in which stresses tend to concentrate and it can result in the early failure of the joint. Main reasons for undercutting are the excessive welding currents, long arc lengths and fast travel speeds.

Underfilling may be due to low currents, fast travel speeds and small size of electrodes. Overlap may occur due to low currents, longer arc lengths and slower welding speeds.

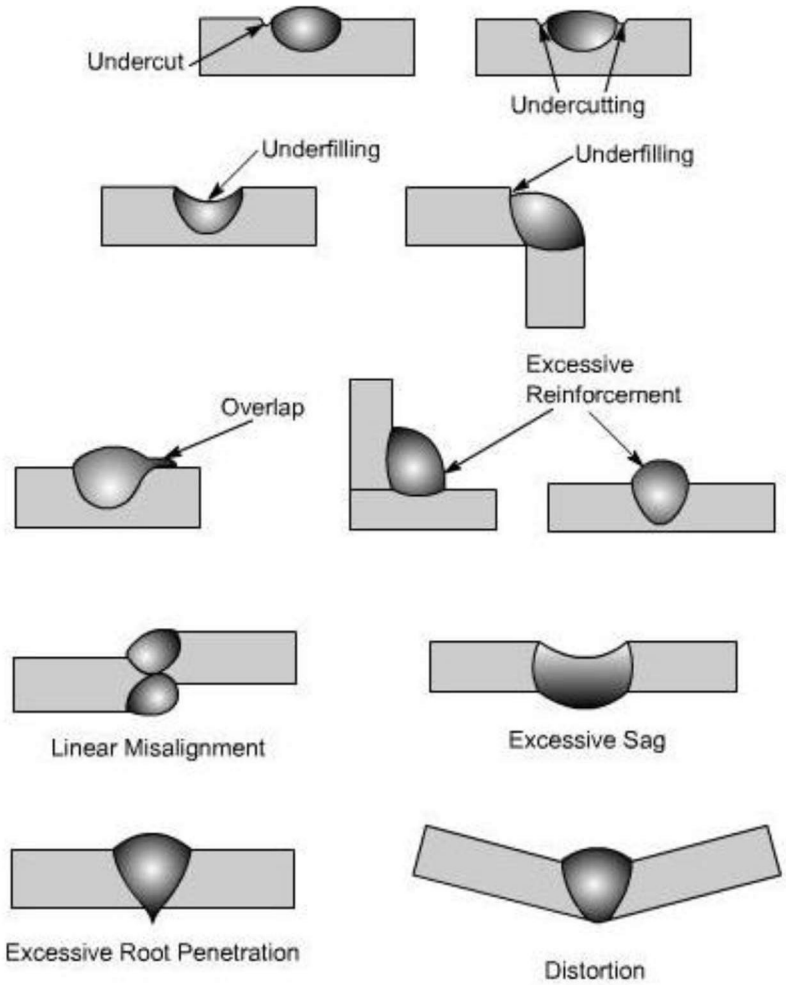

Various Imperfect Shapes of Welds

Excessive reinforcement is formed if high currents, low voltages, slow travel speeds and large size electrodes are used. Excessive root penetration and sag occur if excessive high currents and slow travel speeds are used for relatively thinner members. Distortion is caused because of shrinkage occurring due to large heat input during welding.

Miscellaneous Defects

Various miscellaneous defects may be multiple arc strikes i.e. several arc strikes are one behind the other, spatter, grinding and chipping marks, tack weld defects, oxidized surface in the region of weld, unremoved slag and misalignment of weld beads if welded from both sides in butt welds.

UNIT III

METAL FORMING

METAL FORMING

Metal forming is also known as mechanical working of metals. Metal forming operations are frequently desirable either to produce a new shape or to improve the properties of the metal. Shaping in the solid state may be divided into non-cutting shaping such as forging, rolling, pressing, etc., and cutting shaping such as the machining operations performed on various machine tools. Non-cutting or non-machining shaping processes are referred to as mechanical working processes. It means an intentional and permanent deformation of metals plastically beyond the elastic range of the material. The main objectives of metal working processes are to provide the desired shape and size, under the action of externally applied forces in metals. Such processes are used to achieve optimum mechanical properties in the metal and reduce any internal voids or cavities present and thus make the metal dense.

Metals are commonly worked by plastic deformation because of the beneficial effect that is imparted to the mechanical properties by it. The necessary deformation in a metal can be achieved by application of mechanical force only or by heating the metal and then applying a small force. The impurities present in the metal are thus get elongated with the grains and in the process get broken and dispersed throughout the metal. This also decreases the harmful effect of the impurities and improves the mechanical strength. This plastic deformation of a metal takes place when the stress caused in the metal, due to the applied forces reaches the yield point. The two common phenomena governing this plastic deformation of a metal are (*a*) deformation by slip and (*b*) deformation by twin formation. In the former case it is considered that each grain of a metal is made of a number of unit cells arranged in a number of planes, and the slip or deformation of metal takes place along that slip plane which is subjected to the greatest shearing stress on account of the applied forces. In the latter case, deformation occurs along two parallel planes, which move diagonally across the unit cells. These parallel planes are called twinning planes and the portion of the grains covered between them is known as twinned region. On the macroscopic scale, when plastic deformation occurs, the metal appears to flow in the solid state along specific directions, which are dependent on the processing and the direction of applied forces. The crystals or grains of the metal get elongated in the direction of metal flow. However this flow of metal can be easily be seen under microscope after polishing and suitable etching of the metal surface. The visible lines are called fibre flow lines. The above deformations may be carried out at room temperature or higher temperatures. At higher temperatures the deformation is faster because the bond between atoms of the metal grains is reduced. Plasticity, ductility and malleability are the properties of a material, which retains the deformation produced under applied forces permanently and hence these metal properties are important for metal working processes.

Plasticity is the ability of material to undergo some degree of permanent deformation without rupture or failure. Plastic deformation will take place only after the elastic range has been exceeded. Such property of material is important in forming, shaping, extruding and many other hot and cold working processes. Materials such as clay, lead, etc. are plastic at room temperature and steel is plastic at forging temperature. This property generally increases with increase in temperature.

Ductility is the property of a material enabling it to be drawn into wire with the application of tensile force. A ductile material must be both strong and plastic. The ductility is usually measured by the terms percentage elongation and percent reduction in area often used as empirical measures of ductility. The ductile material commonly used in engineering practice in order of

diminishing ductility are mild steel, copper, aluminum, nickel, zinc, tin and lead.

Malleability is the ability of the material to be flattened into thin sheets without cracking by hot or cold working. A malleable material should be plastic but it is not essential to be so strong. The malleable materials commonly used in engineering practice in order of diminishing malleability are lead, soft steel, wrought iron, copper and aluminum. Aluminum, copper, tin, lead, steel, etc. are recognized as highly malleable metals.

STRAIN HARDENING

Strain hardening (also called work-hardening or cold-working) is the process of making a metal harder and stronger through plastic deformation. When a metal is plastically deformed, dislocations move and additional dislocations are generated. The more dislocations within a material, the more they will interact and become pinned or tangled. This will result in a decrease in the mobility of the dislocations and a strengthening of the material. This type of strengthening is commonly called cold-working. It is called cold-working because the plastic deformation must occurs at a temperature low enough that atoms cannot rearrange themselves. When a metal is worked at higher temperatures (hot-working) the dislocations can rearrange and little strengthening is achieved.

Strain hardening can be easily demonstrated with piece of wire or a paper clip. Bend a straight section back and forth several times. Notice that it is more difficult to bend the metal at the same place. In the strain hardened area dislocations have formed and become tangled, increasing the strength of the material. Continued bending will eventually cause the wire to break at the bend due to fatigue cracking. (After a large number of bending cycles, dislocations form structures called Persistent Slip Bands (PSB). PSBs are basically tiny areas where the dislocations have piled up and moved the material surface out leave steps in the surface that act as stress risers or crack initiation points.).

Effects of Elevated Temperature on Strain Hardened Materials

When strain hardened materials are exposed to elevated:
Temperatures, the strengthening that resulted from the plastic deformation can be lost. This can be a bad thing if the strengthening is needed to support a load. However, strengthening due to strain hardening is not always desirable, especially if the material is being heavily formed since ductility will be lowered.
Heat treatment can be used to remove the effects of strain hardening. Three things can occur during heat treatment:

1. Recovery
2. Recrystallization
3. Grain growth

RECOVERY

When a stain hardened material is held at an elevated temperature an increase in atomic diffusion occurs that relieves some of the internal strain energy. Remember that atoms are not fixed in position but can move around when they have enough energy to break their bonds. Diffusion increases rapidly with rising temperature and this allows atoms in severely strained regions to move to unstrained positions. In other words, atoms are freer to move around and recover a normal position in the lattice structure. This is known as the recovery phase and it results in an adjustment of strain on a microscopic scale. Internal residual stresses are lowered due to a reduction in the dislocation density

and a movement of dislocation to lower-energy positions. The tangles of dislocations condense into sharp two-dimensional boundaries and the dislocation density within these areas decrease. These areas are called subgrains. There is no appreciable reduction in the strength and hardness of the material but corrosion resistance often improves.

RECRYSTALLIZATION

At a higher temperature, new, strain-free grains nucleate and grow inside the old distorted grains and at the grain boundaries. These new grains grow to replace the deformed grains produced by the strain hardening. With recrystallization, the mechanical properties return to their original weaker and more ductile states. Recrystallization depends on the temperature, the amount of time at this temperature and also the amount of strain hardening that the material experienced. The more strain hardening, the lower the temperature will be at which recrystallization occurs. Also, a minimum amount (typically 2-20%) of cold work is necessary for any amount of recrystallization to occur. The size the new grains is also partially dependant on the amount of strain hardening. The greater the stain hardening, the more nuclei for the new grains, and the resulting grain size will be smaller (at least initially).

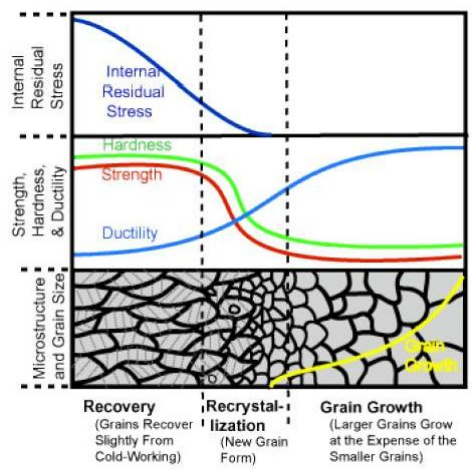

GRAIN GROWTH

If a specimen is left at the high temperature beyond the time needed for complete recrystallization, the grains begin to grow in size. This occurs because diffusion occurs across the grain boundaries and larger grains have less grain boundary surface area per unit of volume. Therefore, the larger grains lose fewer atoms and grow at the expense of the smaller grains. Larger grains will reduce the strength and toughness of the material. Comparison between hot working and cold working processes can be done in aspects like carried out temperature, stress set up, tolerances, hardening, deformation, surface finish, improved properties, and cracks formation.

EMBOSSING

The below Figure shows the embossing process. It is a process through which blanks of sheet metal are stretched to shape under pressure by means of a punch and a die. Punch operates at a low speed to allow time for proper stretching. The operation gives a stiffening effect to the metal being embossed. Stress in the material may be reduced by producing deep parallel ridges. A large number of ornamental wares, such as plates in sheet metal are produced. A simple form of this process, called open embossing, consists of producing simple shallow shapes by the punch only.

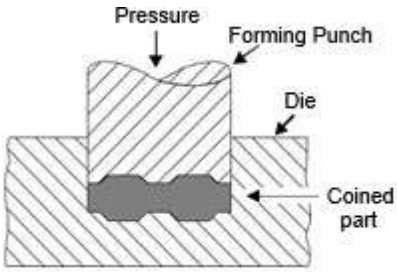

COINING

The below figure shows the coining process used in cold working operations. It is basically a cold working operation, which is performed in dies where the metal blank is confined and its lateral flow is restricted. It is mainly used for production of important articles such as medals, coins, stickers and other similar articles, which possess shallow configurations on their surfaces. The operation involves placing a metal slug in the die and applying heavy pressure by the punch. The metal flows plastically and is squeezed to the shape between punch and the die. The process, on account of the very high pressures required, can be employed only for soft metals with high plasticity.

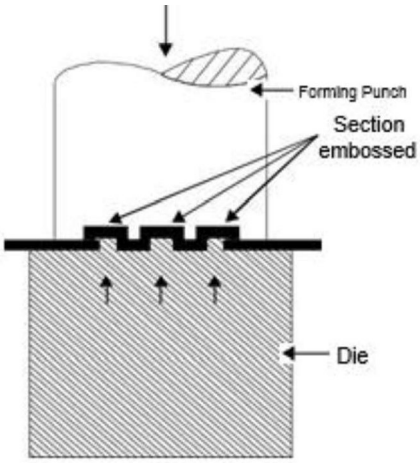

BENDING

Bending of sheet metal is a common and vital process in manufacturing industry. **Sheet metal bending** is the plastic deformation of the work over an axis, creating a change in the part's geometry. Similar to other metal forming processes, bending changes the shape of the work piece, while the volume of material will remain the same. In some cases bending may produce a small change in sheet thickness. For most operations, however, bending will produce essentially no change in the thickness of the sheet metal. In addition to creating a desired geometric form, bending is also used to impart strength and stiffness to sheet metal, to change a part's moment of inertia, for cosmetic appearance and to eliminate sharp edges.

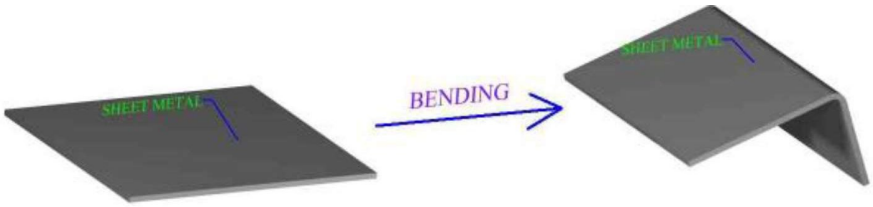

HOT WORKING

Mechanical working processes which are done above recrystallization temperature of the metal are known as hot working processes. Some metals, such as lead and tin, have a low recrystallization temperature and can be hot-worked even at room temperature, but most commercial metals require some heating. However, this temperature should not be too high to reach the solidus temperature; otherwise the metal will burn and become unsuitable for use. In hot working, the temperature of completion of metal working is important since any extra heat left after working aid in grain growth. This increase in size of the grains occurs by a process of coalescence of adjoining grains and is a function of time and temperature. Grain growth results in poor mechanical properties. If the hot working is completed just above the recrystallization temperature then the resultant grain size would be fine. Thus for any hot working process the metal should be heated to such a temperature below its solidus temperature, that after completion of the hot working its temperature will remain a little higher than and as close as possible to its recrystallization temperature

EFFECT OF HOT WORKING ON MECHANICAL PROPERTIES OF METALS

1. This process is generally performed on a metal held at such a temperature that the metal does not work-harden. A few metals e.g., Pb and Sn (since they possess low crystallization temperature) can be hot worked at room temperature.
2. Raising the metal temperature lowers the stresses required to produce deformations and increases the possible amount of deformation before excessive work hardening takes place.
3. Hot working is preferred where large deformations have to be performed that do not have the primary purpose of causing work hardening.
4. Hot working produces the same net results on a metal as cold working and annealing. It does not strain harden the metal.
5. In hot working processes, compositional irregularities are ironed out and non-metallic impurities are broken up into small, relatively harmless fragments, which are uniformly dispersed throughout the metal instead of being concentrated in large stress-raising metal working masses.
6. Hot working such as rolling process refines grain structure. The coarse columnar dendrites of cast metal are refined to smaller equiaxed grains with corresponding improvement in mechanical properties of the component.
7. Surface finish of hot worked metal is not nearly as good as with cold working, because of oxidation and scaling.
8. One has to be very careful as regards the temperatures at which to start hot work and at which to stop because this affects the properties to be introduced in the hot worked metal.
9. Too high a temperature may cause phase change and overheat the steel whereas too low temperature may result in excessive work hardening.
10. Defects in the metal such as blowholes, internal porosity and cracks get removed or welded up during hot working.
11. During hot working, self-annealing occurs and recrystallization takes place immediately following plastic deformation. This self-annealing action prevents hardening and loss of ductility.

MERITS OF HOT WORKING

1. As the material is above the recrystallisation temperature, any amount of working can be imparted since there is no strain hardening taking place.
2. At a high temperature, the material would have higher amount of ductility and therefore there is no limit on the amount of hot working that can be done on a material. Even brittle materials can be hot worked.
3. In hot working process, the grain structure of the metal is refined and thus mechanical properties improved.
4. Porosity of the metal is considerably minimized.
5. If process is properly carried out, hot work does not affect tensile strength, hardness, corrosion resistance, etc.
6. Since the shear stress gets reduced at higher temperatures, this process requires much less force to achieve the necessary deformation.
7. It is possible to continuously reform the grains in metal working and if the temperature and rate of working are properly controlled, a very favorable grain size could be achieved giving rise to better mechanical properties.
8. Larger deformation can be accomplished more rapidly as the metal is in plastic state.
9. No residual stresses are introduced in the metal due to hot working.
10. Concentrated impurities, if any in the metal are disintegrated and distributed throughout the metal.
11. Mechanical properties, especially elongation, reduction of area and izod values are improved, but fibre and directional properties are produced.
12. Hot work promotes uniformity of material by facilitating diffusion of alloy constituents and breaks up brittle films of hard constituents or impurity namely cementite in steel.

DEMERITS OF HOT WORKING

1. Due to high temperature in hot working, rapid oxidation or scale formation and surface de- carburization take place on the metal surface leading to poor surface finish and loss of metal.
2. On account of the loss of carbon from the surface of the steel piece being worked the surface layer loses its strength. This is a major disadvantage when the part is put to service.
3. The weakening of the surface layer may give rise to a fatigue crack which may ultimately result in fatigue failure of the component.
4. Some metals cannot be hot worked because of their brittleness at high temperatures.
5. Because of the thermal expansion of metals, the dimensional accuracy in hot working is difficult to achieve.
6. The process involves excessive expenditure on account of high cost of tooling. This however is compensated by the high production rate and better quality of components.
7. Handling and maintaining of hot working setups is difficult and troublesome.

COLD WORKING

Cold working of a metal is carried out below its recrystallization temperature. Although normal room temperatures are ordinarily used for cold working of various types of steel, temperatures up to the recrystallization range are sometimes used. In cold working, recovery processes are not effective.

PURPOSE OF COLD WORKING

The common purpose of cold working is given as under

1. Cold working is employed to obtain better surface finish on parts.
2. It is commonly applied to obtain increased mechanical properties.
3. It is widely applied as a forming process of making steel products using pressing and spinning.
4. It is used to obtain thinner material.

LIMITATIONS OF COLD WORKING

1. The cold worked process possesses less ductility.
2. Imparted directional properties may be detrimental
3. Strain hardening occurs.
4. Metal surfaces must be clean and scale free before cold working.
5. Hot worked metal has to be pickled in acid to remove scale, etc.
6. Higher forces are required for deformation than those in hot working.
7. More powerful and heavier equipments are required for cold working.

ADVANTAGES OF COLD WORKING

1. In cold working processes, smooth surface finish can be easily produced.
2. Accurate dimensions of parts can be maintained.
3. Strength and hardness of the metal are increased but ductility decreased.
4. Since the working is done in cold state, no oxide would form on the surface and consequently good surface finish is obtained.
5. Cold working increases the strength and hardness of the material due to the strain hardening which would be beneficial in some situations.
6. There is no possibility of decarburization of the surface
7. Better dimensional accuracy is achieved.
8. It is far easier to handle cold parts and it is also economical for smaller sizes.

DISADVANTAGES OF COLD WORKING

1. Some materials, which are brittle, cannot be cold worked easily.
2. Since the material has higher yield strength at lower temperatures, the amount of deformation that can be given to is limited by the capability of the presses or hammers used.
3. A distortion of the grain structure is created.
4. Since the material gets strain hardened, the maximum amount of deformation that can be given is limited. Any further deformation can be given after annealing.
5. Internal stresses are set up which remain in the metal unless they are removed by proper heat- treatment.

ROLLING

Introduction Rolling is one of the most important industrial metal forming operations. Hot Rolling is employed for breaking the ingots down into wrought products such as into blooms and billets, which are subsequently rolled to other products like plates, sheets etc. Rolling is the plastic deformation of materials caused by compressive force applied through a set of rolls. The cross section of the work piece is reduced by the process. The material gets squeezed between a pair of rolls, as a result of which the thickness gets reduced and the length gets increased.

Mostly, rolling is done at high temperature, called hot rolling because of requirement of large deformations. Hot rolling results in residual stress-free product. However, scaling is a major problem,

due to which dimensional accuracy is not maintained. Cold rolling of sheets, foils etc is gaining importance, due to high accuracy and lack of oxide scaling. Cold rolling also strengthens the product due to work hardening

Steel ingot is the cast metal with porosity and blowholes. The ingot is soaked at the hot rolling temperature of 1200o C and then rolled into blooms or billets or slabs.

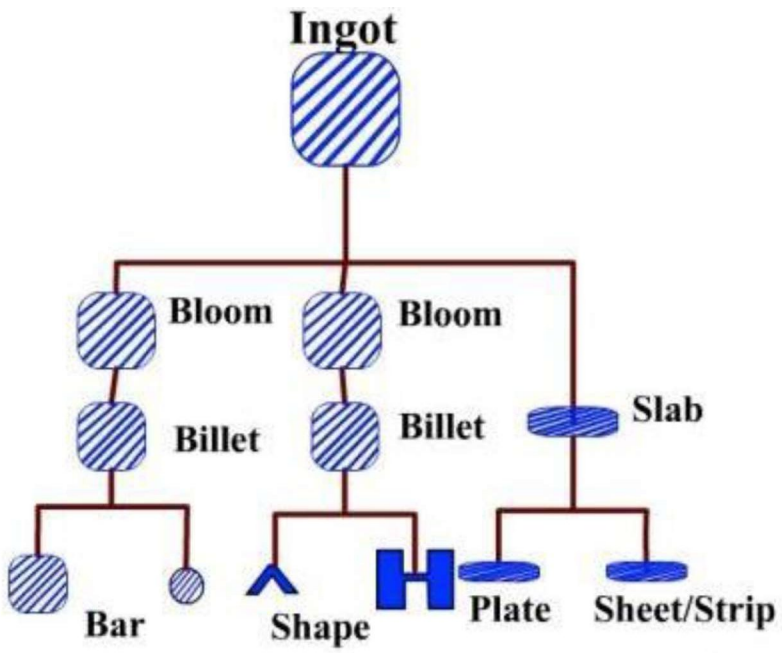

Plates have thickness greater than 6 mm whereas strips and sheets have less than 6 mm thickness. Sheets have greater width and strip has lower width – less than 600 mm.

Rolling mills:
Today we will learn about rolling process types, working, terminology and application with its diagram. Rolling is a major manufacturing process of sheets and other cross sections of large length like I beam, railroads etc. It is one of a metal forming process in which the metal work piece is compressed between a set of rolls where it reduces its cross section area and increases its length. This process gives high production rate, surface finish and grain structure which make it a most suitable metal forming process for large length same cross section work pieces but high set up cost of rolling machine makes it as an alternative process.

Rolling Process:
Terminology:
The most common terminologies used in rolling process are given below.

Ingot:
It is casted structure with porosity and blowholes. Ignot is same as used in forging. This ingot is rolled out at hot temperature of about 1200 degree centigrade into blooms. This ingot may have any size according to the rolling requirement.

Blooms:
It is first rolled product making by rolling ingot at high temperature. It has cross section area more than or equal to 230 square centimeters. This bloom is further rolled to make I section, billet, channel, railroad etc.

Slab:
Slab is made by hot rolling of ingot. It has cross section area greater than or equal to 100 centimeters square and its width is greater than or equal to three times of its thickness. Slabs are used to form plates, sheets, strips etc.

Billets:
Billets are product of hot rolling of blooms. It has greater than or equal to 40 square centimeters cross section area. Billets are used to roll into pipes, bars, wire etc.

Plate:
Plate is product of further rolling of slab. It has greater than 6 mm thickness.

Sheet:
Sheet has less than 6 mm thickness and width greater than 60 cm.

Strip:
Strip is same as sheet but have width less than 60 cm.

Two high reversing mill:
In two high reversing rolling mills the rolls rotate ist in one direction and then in the other, so that rolled metal may pass back and forth through the rolls several times. This type is used in pluming and slabing mills and for roughing work in plate , rail , structural and other mills.
These are more expensive compared to the non reversing rolling mills. Because of the reversible drive needed.

Two high non reversing mill:
In two high non reversing mills as two rolls which revolve continuously in same direction therefore smaller and less costly motive power can be used. However every time material is to be carried back over the top of the mill for again passing in through the rolls. Such an arrangement is used in mills through which the bar passes once and in open train plate mill.

Three high rolling mill:
It consists of a roll stand with three parallel rolls one above the other. Adjacent rolls rotates in opposite direction. So that the material may be passed between the top and the middle roll in one direction and the bottom and middle rolls in opposite one.
In three high rolling mills the work piece is rolled on both the forward and return passes. First of all the work piece passes through the bottom and middle rolls and the returning between the middle and the top rolls.

So that thickness is reduced at each pass. Mechanically operated lifted tables are used which move vertically or either side of the stand. So that the work piece fed automatically into the roll gap. Since the rolls run in one direction only a much less powerful motor and transmission system is required. The rolls of a three high rolling mills may be either plain or grooved to produce plate or sections respectively.
A four high rolling mill is used for the hot rolling of armor and other plates as well as cold rolling of plates, sheets and strips.
Tandem rolling mills:

It is a set of two or three stands of roll set in parallel alignment. So that a continuous pass may be made through each one successively with change the direction of material.

Cluster rolling mills:

It is a special type of four high rolling mill in which each of the two working rolls is backup by two or more of the larger backup rolls for rolling hard in materials. It may be necessary to employ work rolls of a very small diameter but of considerable length. In such cases adequate of the working rolls can be obtained by using a cluster mill.

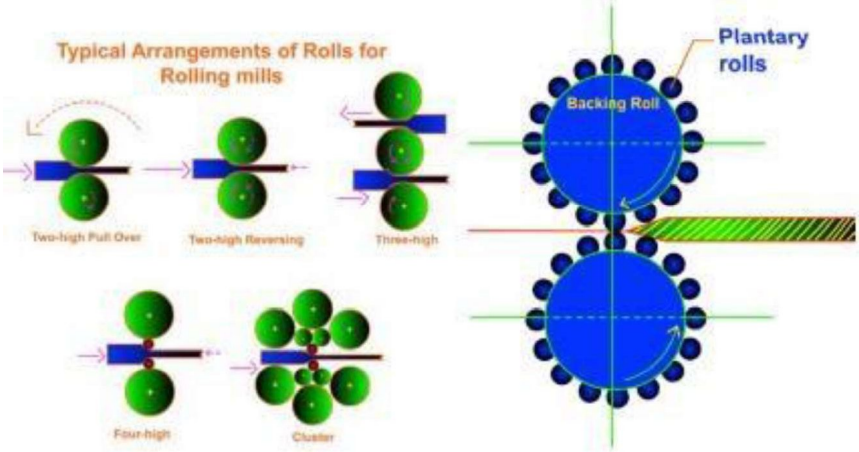

Electro Magnetic Forming

The process is also called magnetic pulse forming and is mainly used for swaging type operations, such as fastening fittings on the ends of tubes and crimping terminal ends of cables. Other applications are blanking, forming, embossing, and drawing. The work coils needed for different applications vary although the same power source may be used.

To illustrate the principle of electromagnetic forming, consider a tubular work piece. This work piece is placed in or near a coil, in the figure below, A high charging voltage is supplied for a short time to a bank of capacitors connected in parallel. (The amount of electrical energy stored in the bank can be increased either by adding capacitors to the bank or by increasing the voltage). When the charging is complete, which takes very little time, a high voltage switch triggers the stored electrical energy through the coil. A high – intensity magnetic field is established which induces eddy currents into the conductive work piece, resulting in the establishment of another magnetic field. The forces produced by the two magnetic fields oppose each other with the consequence that there is a repelling force between the coil and the tubular work piece that causes permanent deformation of the work piece.

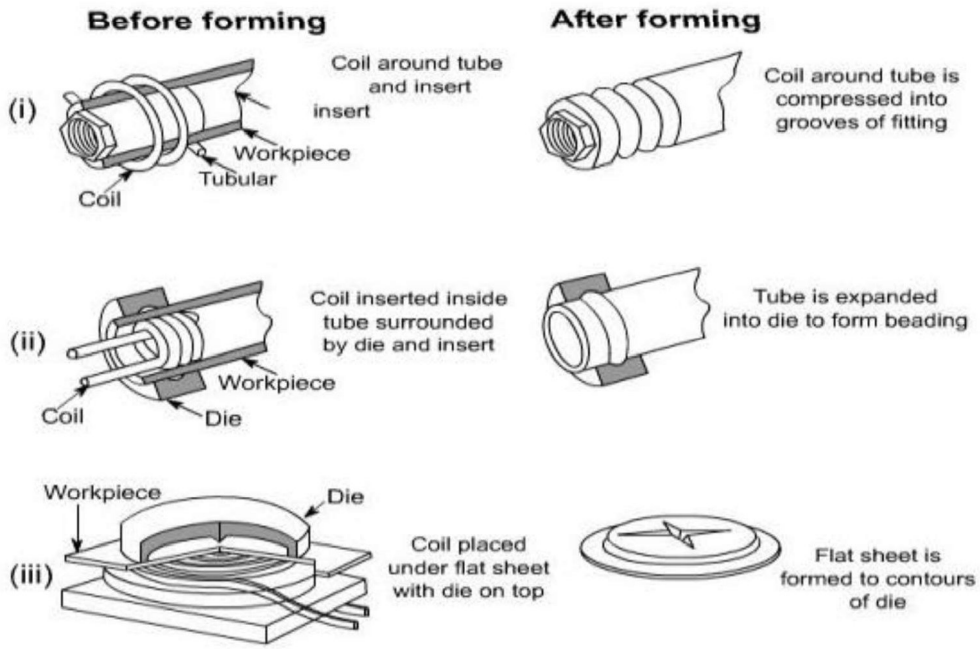

Various applications of magnetic forming process. (i) Swaging, (ii) Expanding, and (iii) Embossing or Blanking

Either permanent or expandable coils may be used. Since the repelling force acts on the coil as well the work, the coil itself and the insulation on it must be capable of withstanding the force, or else they will be destroyed. The expandable coils are less costly and are also preferred when high energy level is needed.

Magnetic forming can be accomplished in any of the following three ways, depending upon the requirements.

Coil surrounding work piece. When a tube – like part x is to fit over another part y (shown as insert in In Figure above (i), coil is designed to surround x so that when energized, would force the material of x tightly around y to obtain necessary fit.

Coil inside work piece. Consider fixing of a collar on a tube – like part, as shown in above figure (ii). The magnetic coil is placed inside the tube – like part, so that when energized would expand the material of the part into the collar.

Coil on flat surface. Flat coil having spiral shaped winding can also be designed to be placed either above or below a flat work piece, as shown in above figure (iii).These coils are used in conjunction with a die to form, emboss, blank, or dimple the work piece.

In electromagnetic forming, the initial gap between the work piece and the die surface, called the fly distance, must be sufficient to permit the material to deform plastically. From energy considerations, the ideal pressure pulse should be of just enough magnitude that accelerates the part material to some maximum velocity and then let the part come to zero velocity by the time it covers the full fly distance. All forming coils fail, expendable coils fail sooner than durable coils, and because extremely high voltages and currents are involved, it is essential that proper safety precautions are observed by the production and maintenance personnel.

Electro Hydraulic Forming

Electro hydraulic forming (EHF), also known as electro spark forming, is a process in which electrical energy is converted into mechanical energy for the forming of metallic parts. A bank of capacitors is first charged to a high voltage and then discharged across a gap between two electrodes, causing explosions inside the hollow work piece, which is filled with some suitable medium, generally water.

These explosions produce shock waves that travel radially in all directions at high velocity until they meet some obstruction. If the discharge energy is sufficiently high, the hollow work piece is deformed. The deformation can be controlled by applying external restraints in the form of die or by varying the amount of energy released,

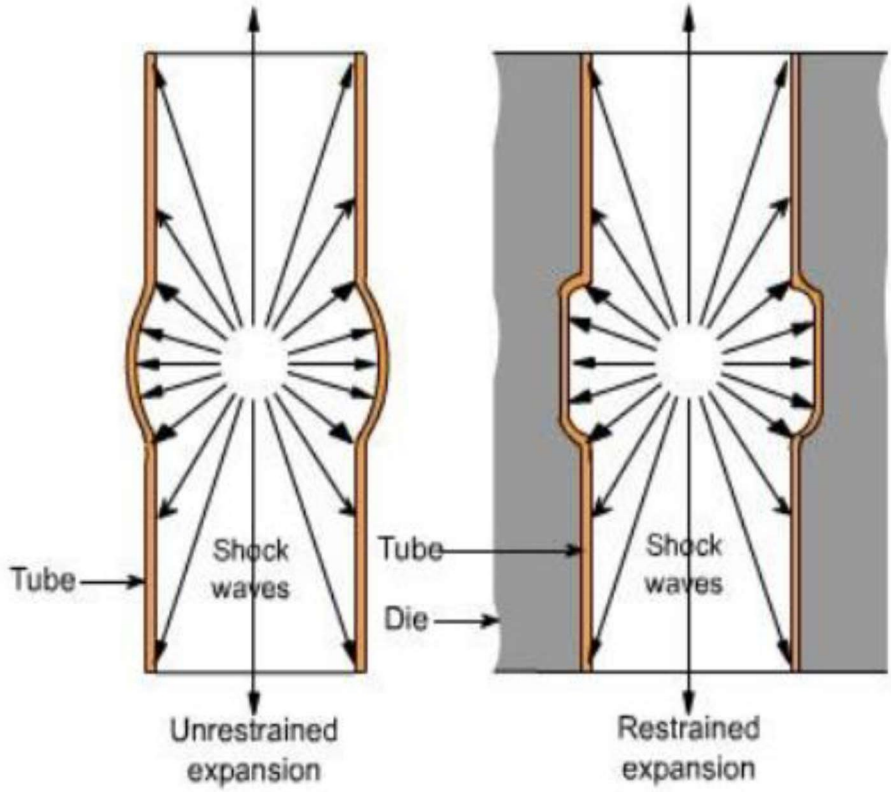

Unrestrained and Restrained Electro-hydraulic forming

Advantages

1. EHF can form hollow shapes with much ease and at less cost compared to other forming techniques.
2. EHF is more adaptable to automatic production compared to other high energy rate forming techniques.
3. EHF can produce small – to intermediate sized parts that don't have excessive energy requirements.

Stretch forming

Stretch forming is a metal forming process in which a piece of sheet metal is stretched and bent simultaneously over a die in order to form large contoured parts. Stretch forming is performed on a stretch press, in which a piece of sheet metal is securely gripped along its edges by gripping jaws. The gripping jaws are each attached to a carriage that is pulled by pneumatic or hydraulic force to stretch the sheet. The tooling used in this process is a stretch form block, called a form die, which is a solid contoured piece against which the sheet metal will be pressed. The most common stretch presses are oriented vertically, in which the form die rests on a press table that can be raised into the sheet by a hydraulic ram. As the form die is driven into the sheet, which is gripped tightly at its edges, the tensile forces increase and the sheet plastically deforms into a new shape. Horizontal stretch presses mount the form die sideways on a stationary press table, while the gripping jaws pull the sheet horizontally around the form die.

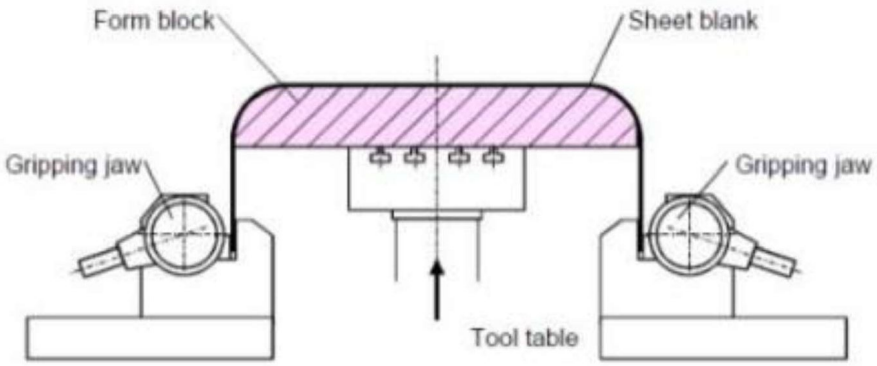

Stretch Forming

Explosive forming is distinguished from conventional forming in that the punch or diaphragm is replaced by an explosive charge. The explosives used are generally high – explosive chemicals, gaseous mixtures, or propellants. There are two techniques of high – explosive forming: stand – off technique and the contact technique.

Standoff Technique The sheet metal work piece blank is clamped over a die and the assembly is lowered into a tank filled with water. The air in the die is pumped out. The explosive charge is placed at some predetermined distance from the work piece. On detonation of the explosive, a pressure pulse of very high intensity is produced. A gas bubble is also produced which expands spherically and then collapses. When the pressure pulse impinges against the work piece, the metal is deformed into the die with as high velocity as 120 m/s.

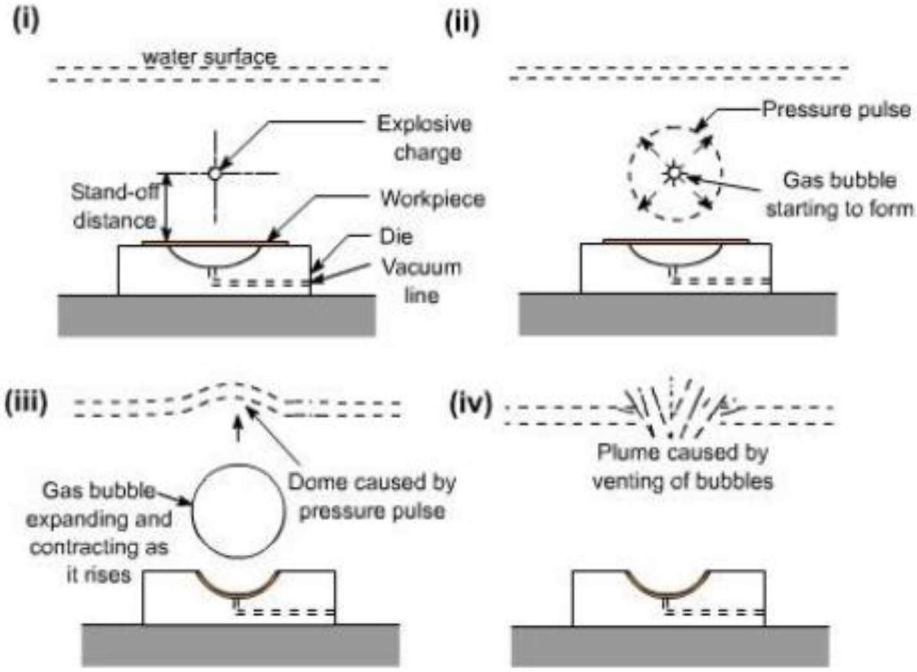

Explosive Forming

UNIT IV

EXTRUSION AND FORGING

Backgrounds

Conventional manufacturing processes such as machining, casting, assembly (fabrication), and metal forming finds applications in major automobile and aircraft industries. Among them metal forming as a technique has advantages over other manufacturing processes due its high precision in production of complex shapes with minimal material wastage and better mechanical properties. It has gained lot of importance in the past decade [1-2]. Metal forming is a process in which a metal block is being plastically deformed to a desired geometry. In order to obtain the deformation a force higher than the yield strength of the material is applied. Metal forming is a broad concept, can be classified into two major sections: bulk metal working processes and sheet metal working processes. Bulk metal deformation processes can be broadly of four types, namely, rolling, forging, extrusion and drawing. Forging and extrusion are frequently used forming processes since early 18th century [3]. Extrusion and forging having many advantages such as high dimensional accuracy, minimal or complete elimination of machining, good surface finish, better mechanical properties, quick production process and economic in comparison with other conventional manufacturing processes [4]. Extrusion and forging processes can be carried out under three working temperatures, namely, hot, cold and warm linked to recrystalization tempurature. Cold forging and extrusion processes have more advantages compared to hot and warm processes with respect to geometrical accuracy, surface finish and mechanical properties of the final component [5].

Different types of extrusion processes

Basically, cold extrusion is classified into four types depending on the relative movement of the punch and extruded product [6]. They are: forward (Direct) extrusion, backward (indirect) extrusion, radial (lateral) extrusion and impact extrusion [7].

Direct (Forward) extrusion

Forward extrusion process, represented in Figure 1.1, is the most common method used in the industries to manufacture long products of uniform cross-section. In this type of extrusion, the ram moves in the same direction of the extruded product. There is a relative movement between the

billet and container, leading to high frictional forces. Friction at the die and container wall increases the extrusion load requirements than that for indirect extrusion.

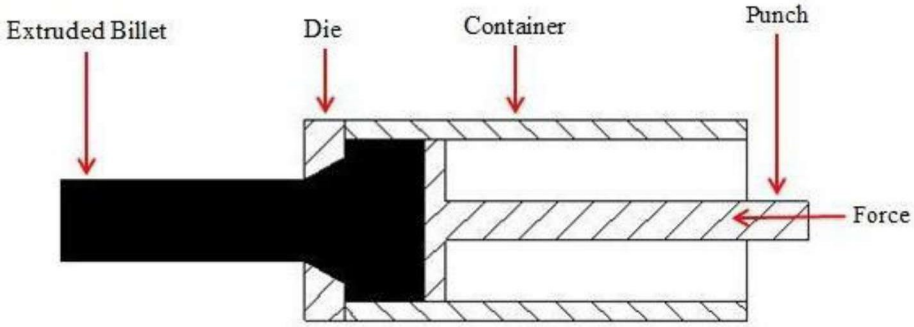

Figure 1.1: Direct extrusion

Indirect (Backward or Reverted) extrusion

In this type of extrusion, the billet does not move relative to the container. A die fixed on a hollow ram which is pushed against the billet, leading to flow of the extruded section in opposite direction to the ram movement shown in Figure 1.2. Frictional force between billet and container interface is thus eliminated during indirect extrusion. Alternatively, the closed container end in backward extrusion can be forced to move against die and ram assembly.

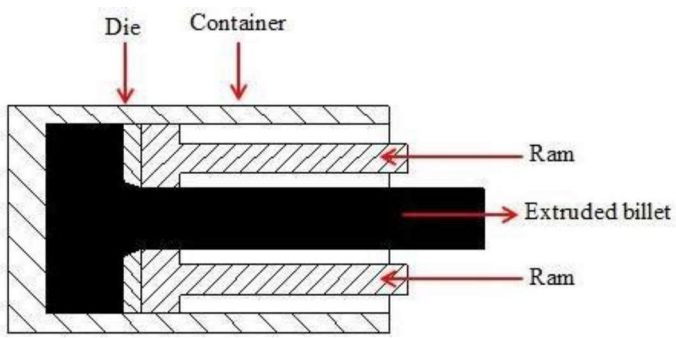

Figure 1.2: Indirect extrusion

Radial (Lateral) extrusion

In this type of extrusion, the material flow perpendicularly to the direction of the punch movement as shown in Figure 1.3. Due to the change in metal flow direction additional power is required to overcome the friction at the die-billet interface. These types of extrusions are commonly used for production of flange type components.

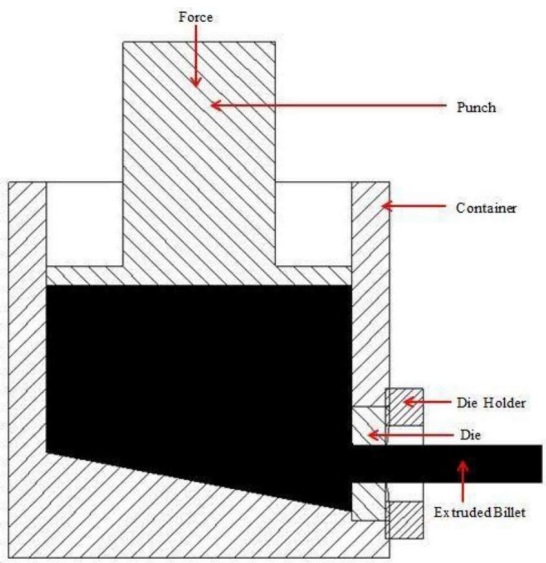

Figure 1.3: Radial extrusion

Impact extrusion

This process (illustrated in Figure 1.4) is similar to backward/indirect extrusion process represented in Figure 1.2. The punch runs down quickly on the blank which gets revert extruded the punch to obtain a tubular section. The length of the tube depends on the size of the blank. Toothpaste tubes are an excellent example of this process.

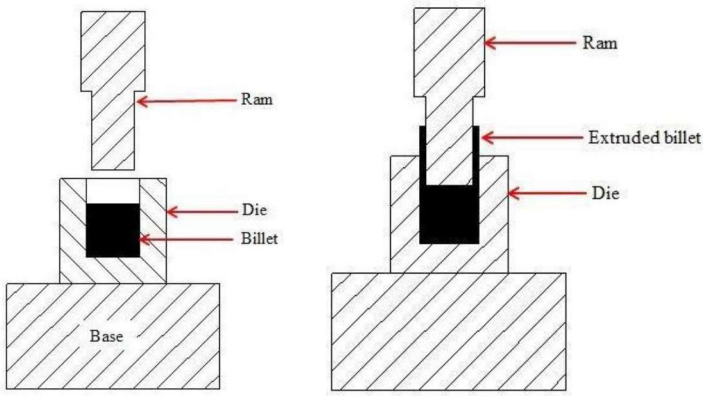

Figure 1.4: Impact extrusion

Hydrostatic extrusion

Besides these four types of extrusion processes, we also have hydrostatic extrusion method in which the billet in the container is extruded through the die by the action of a hydrostatic liquid pressure medium rather than by direct application of the load with a ram represented in Figure 1.5.

The billet is surrounded by a hydrostatic fluid, which is sealed off and is pressurized sufficiently to extrude the billet through the die. This process can be done hot, warm, or cold, however; the temperature is limited by the stability of the fluid used. This method can be used to extrude brittle materials that cannot be processed by conventional extrusion since ductility of the material is improved by applying hydrostatic pressure.

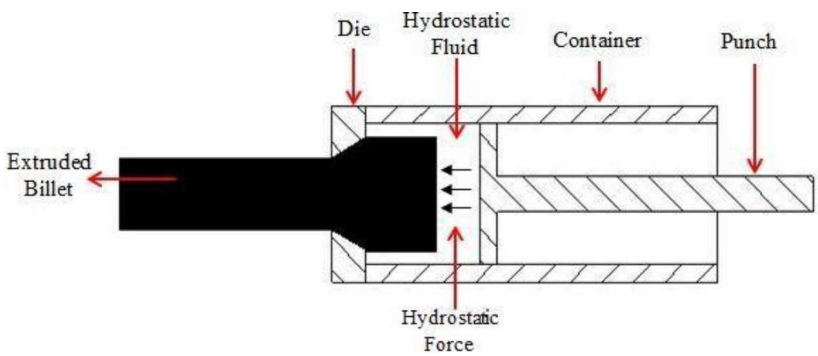

Figure 1.5: Hydrostatic extrusion

Different types of forging processes

According to the nature of the applied force, forging is classified as:

Hammer/drop forging: The applied force is impact type.

Press forging: Load is applied gradually.

Based on the nature of material deformation or direction of applied force forging process is divided as:

Upset forging

In this process, force is applied parallel to the length direction**.** This is the operation of increasing the cross section at the expense of length. Heads of nails, bolts and other hardware products are formed through this technique as shown in Figure 1.6.

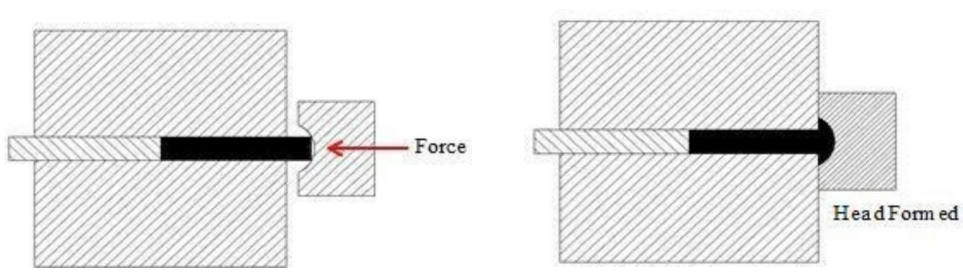

Figure 1.6: Upset forging

Drawing out: In this process, force is applied perpendicular to the length axis of the billet**.** This is the operation in which cross section area decreases with increase of length.

Based on the geometry of the dies by which material is compressed to get a shape forging process is divided as:

Open die forging

In this type, the work is compressed between two flat dies, allowing metal to flow freely laterally with minimum constraint which is shown in Figure 1.7. These types of operations are performed for initial breakdown of the billet.

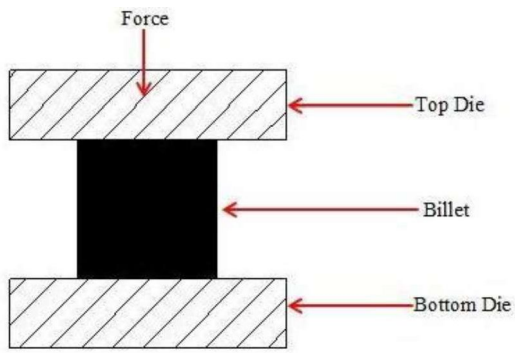

Figure 1.7: Open die forging

Closed die or Impression die forging

In this type of process, the work piece is compressed between two die halves which carry the impressions of the desired shape that is to be imparted on the work piece shown in Figure 1.8. Metal flow is constrained and we get a multidirectional unbroken grain flow inside the product giving better mechanical properties. The extra metal is expelled out as flash mostly at parting line.

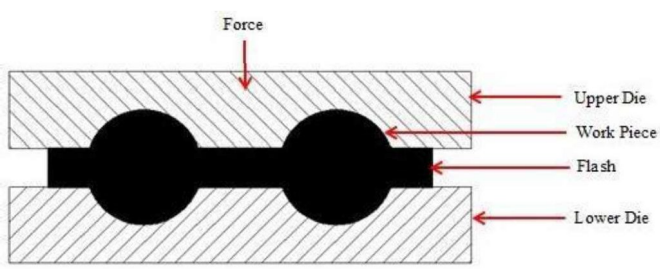

Figure 1.8: Closed die forging

Flashless forging

In this type of forging the volume of the workpiece is equal to the volume of the die cavity, with no requirement of flash arrangement as shown in Figure 1.9.

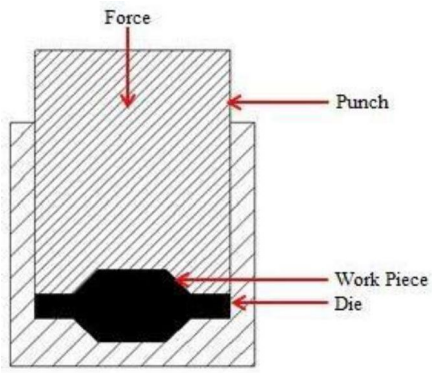

Figure 1.9: Flashless forging

Combined extrusion forging processes

Because of industrial requirements various operation's, such as, direct and indirect extrusion and forging are combined to get complex shapes.

Combined forward and backward extrusion (CE)

In this combine process backward and forward extrusion takes place simultaneously as shown in the Figure 1.10.

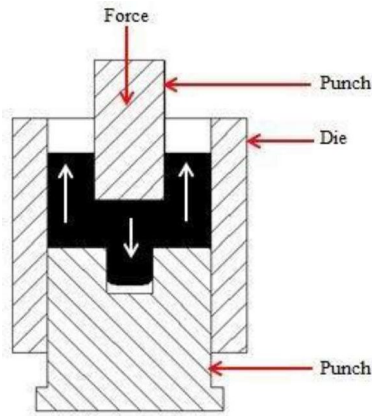

Figure 1.10: Forward-backward extrusion process

Combined extrusion-forging (CEF)

In this type of operation both extrusion and forging takes place simultaneously. As shown in Figure 1.11, forward extrusion takes place for forming of the shaft and forging takes place to form a flange. This process is also called cold heading with forging.

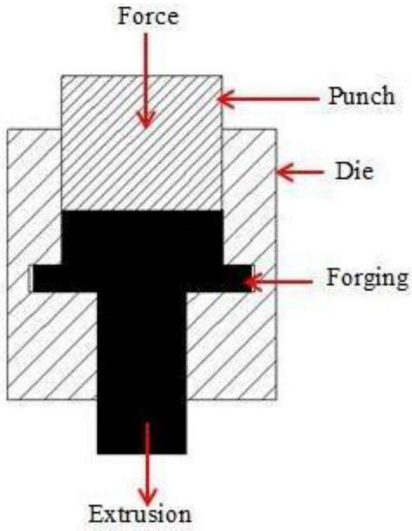

Figure 1.11: Extrusion-forging process

Existing Manufacturing and Modern Industry Demand

The conventional metal extrusion and forging routes have gained importance involving single process (forward or backward extrusion, upsetting or closed die forging) for its manufacturing ability of components with better mechanical properties because of unbroken and multidirectional grain flow directions. The major hindrances encountered by the present manufacturing industries are to produce complex profiles with better surface finish, near net shape in one pass and improved mechanical properties. Due to the ever increasing demand of components with intricacy features single route is not sufficient to manufacture those parts, which lead to the significance of the combined extrusion-forging process.

In combined extrusion-forging technique, a billet is forced by a ram through the dies to flow in the same, opposite and perpendiclar directions with respect to ram movement to obtain the desired shape. The beauty of this process is that two or more forming processes (different type of extrusion and forging) takes place simultaneously. Thereby, reducing the capital investment and we can obtain net or near-net shape product can be obtained by single ram movement at single station. Combined extrusion-forging (CEF) has drawn the attention of automobile, aircraft

industries and received industrial significance due to higher productivity, decrease in material wastage, better mechanical properties when compared to the existing conventional processes. Along with that, complex shapes can also be manufactured with ease, otherwise casting and machining are the present routes of manufacturing.

In the current market requirements, the use of complex aluminium sections are getting larger scope due to its properties of durability, wear resistance, low weight, etc. [8]. Combined extrusion–forging plays a very vital role for the production of near-net shaped products [9]. Metals like aluminium and aluminium based alloys play a predominant role in the cold CEF & CE processes. Due to the presence of high compressive stress, it minimizes cracks in the material in the initial breakdown of the ingot. Further, cold CEF is commercially preferred as it avoids complex tooling.

Although combined extrusion-forging has the ability to represent a better solution, analysis of this process has gained less importance till date due to its complexity nature.

1.1 Conventional Dies

Dies are the replica of the profile which is to be extruded or forged. Those are used as mould/tooling device in manufacturing process for the extrusion, forging and combined extrusion-forging of profiles. The dies used should have higher mechanical characteristics, should be strong enough and have the ability to hold the dimensional accuracy during elevated stresses. In general, tool steels are used as metal extrusion/forging dies. High-grade alloy steels with coatings having higher wear resistance are also used for dies. For higher accuracy and wear resistance sometime carbides are also used as die materials. The essential technical requirements for fabrication of dies are:

- Die angle is an important factor for the material flow, which influences the force requirement. Although, accurate die angle is difficult to establish due to the influence of temperature and lubrication.
- The die design should consider the flash formation for the finishing operations, fillet, corner radii, and shrinkage.

Types of Dies

In general, dies are of three types, namely, flat faced dies, conical dies and curved dies.

Flat faced or square dies (Figure 1.12)

- These dies are most preferred in the industry due to its simple design and low cost.
- Flat faced dies are used to extrude simple designs of hard and tough metal.
- These dies form dead metal zones due to which the metal shears internally which form its own dies angle.
- Difficult for lubrication.

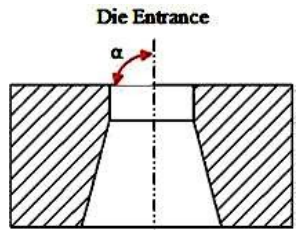

Figure 1.12: Square die

Taper or conical dies (Figure 1.13)

- These dies have an entrance angle for metal flow.
- Dead metal zones are not present in these dies.
- Low frictional force is present when compared to the flat faced dies.
- Lubrication is easy.

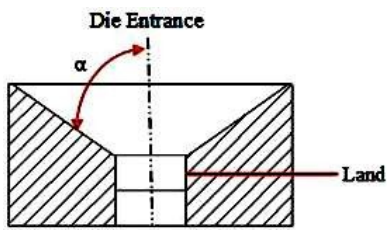

Figure 1.13: Taper die

Curved dies (Figure 1.14)

- Friction loss and redundant work can be minimized
- It can be cosine, sine, elliptic, circular, hyperbolic, polynomial etc.

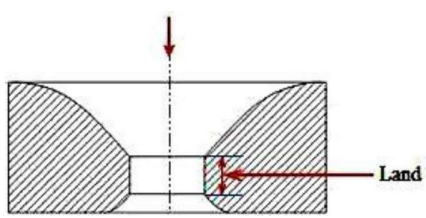

Blanking is a process in which the punch operation removes a final product from a larger piece of sheet metal.

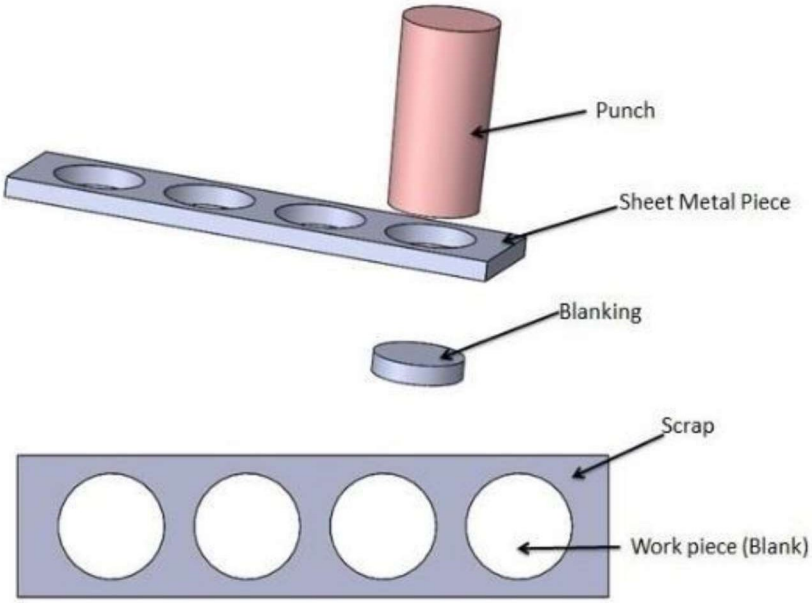

Punching is a material removal process in which the punch operation removes material from a final piece of sheet metal.

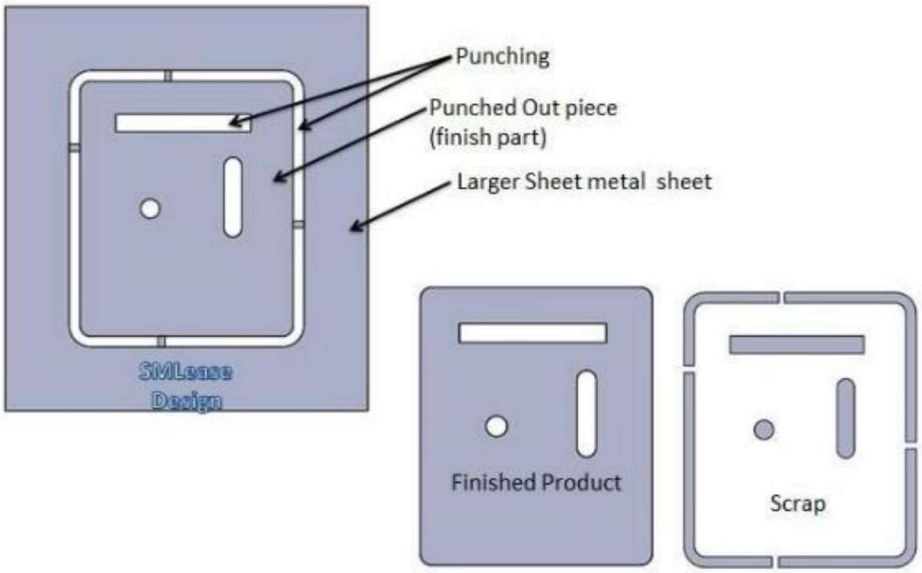

Piercing is process in which punch operation cuts a hole / material by tearing operation from a final piece of sheet metal. Piercing is a blanking operation

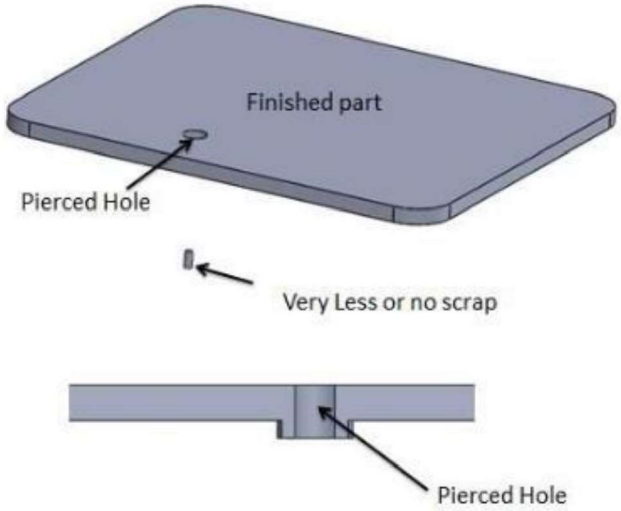

Metal Spinning:

The metal spinning process starts with special machinery that produces rotationally symmetrical (i.e. cone-shaped) hollow parts; usually from circular blanks. Shear forming, a related process where parts are formed over a rotating conical mandrel, can be used to produce not only cone-shaped parts but also elliptical or other concave or convex parts. Often, shear forming is used in conjunction with metal spinning. Metal spinning is used as a replacement for the stamping and deep drawing processes.

The metal spinning process starts with a sheet metal blank which rotates on a lathe. The metal disc is pressed against a tool (called a mandrel or a chuck) with a tailstock. The metal disc, tailstock and tool rotate in a circular motion and a roller presses against the metal to form the metal over the tool through a series of passes by the roller. The resulting part is a piece that duplicates the exterior portion of the tool it was formed on. The basic shapes in metal spinning are cones, flanged covers, hemispheres, cylindrical shells, venturis and parabolic nose shapes.

Metal spinning yields pots and pans, vases, lamp shades, musical-instrument parts and trophies. Automotive parts include wheel discs, rims, hubcaps and clutch drums. Other examples include radar reflectors, parabolic dishes, hoppers, concrete-mixer bodies, drums, pressure bottles, tank ends, compensator and centrifuge parts, pulleys, hydraulic cylinders, engine inlet rings and a variety of jet-engine and missile parts.

Some of the advantages of metal spinning include -

1. Low capital-investment
2. Low tooling and energy costs

3. Short setup times
4. Quick and inexpensive adaptation of tooling and methods to accommodate design changes
5. Ability to carry out other operations such as beading, profiling, trimming and turning in the same production cycle with one setup.
6. Forming forces are appreciably lower than competing processes due to localized working.
7. Economical for one-off parts; prototypes; and small, medium and high volumes.
8. Any sheet material that can be cold formed is a candidate for metal spinning including - cold rolled steel, hot rolled steel, aluminum, stainless steel, brass, copper and exotic metals such as titanium, inconel, and hastealloy.

Tooling for spinning is relatively inexpensive and simple to employ, translating to a short lead time for parts. Tight tolerancing requirements may require secondary operations, but the advent of automated spinning machines allows more precise forming than with manual spinning machines, with less reliance on operator skill.

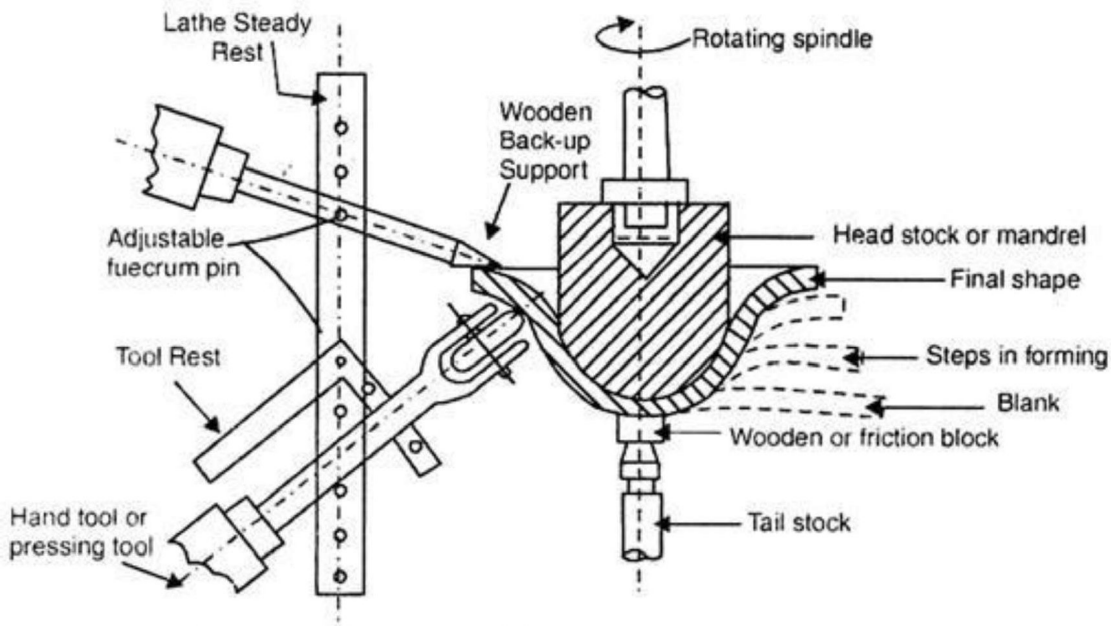

Fig. 8.1. A Schematic of the spinning operation.

The Spinning process is classified in two types i.e., hot-spinning and cold-spinning, depending upon whether the blank or work piece has been heated before spinning or not.

(i) Hot Spinning:

In hot spinning, the metal blank is heated to forging temperature and then forming it into the desired shape.

A blunt pressing tool is used which contacts the surface of the rotating part and causes the flow of metal over the form mandrel. This method is generally used for thicker plates and sheets, which do not plastically de-formed at room temperature by pressing tool.

In order to avoid wrinkling at the outer edge a back-up support (hard wood bar) opposite to the tool is used, when working with relatively thin sheets. Hot spinning produces parts such as heads for pressure vessels, refinery equipment's and large tanks.

(ii) Cold Spinning:

Cold spinning process is similar to hot spinning except that the metal blank is worked at room temperature. This method is generally best suited for thin plates and sheets of aluminum and other soft metals.

Cold spinning produces parts such as light reflectors, cooking utensils, liquid containers, radial engine cowling, domestic use hollow parts etc.

Drawing:

Drawing is a process of cold forming a flat precut metal blank into a hollow vessel without excessive wrinkling, thinning, or fracturing. The various forms produced may be cylindrical or box shaped, with straight or tapered sides or a combination of straight, tapered, and curved sides. The parts may vary from 1/4" (6mm) diam parts or smaller to aircraft or automotive parts large enough to require mechanical handling equipment.

Drawing is a process of cold forming a flat precut metal blank into a hollow vessel without excessive wrinkling, thinning, or fracturing. The various forms produced may be cylindrical or box shaped, with straight or tapered sides or a combination of straight, tapered, and curved sides. The parts may vary from 1/4" (6mm) diam parts or smaller to aircraft or automotive parts large enough to require mechanical handling equipment.

The **deep drawing process** is simply defined as the stretching of sheet metal stock, commonly referred to as a blank, around a plug. The edges of the metal blank are restrained by rings and the plug is deep drawn into a top die cavity to achieve the end shape that is desired. There are many shapes that can be made through deep drawing and stamping including --

1. cups
2. cans
3. pans
4. cylinders
5. domes
6. hemispheres
7. tubes
8. hoppers
9. Irregular shaped products.

Wire drawing is a metalworking process used to reduce the cross-section of a wire by pulling the wire through a single, or series of, drawing die(s). There are many applications for wire drawing, including electrical wiring, cables, tension- CREC Department of Mechanical Engineering Page 54 loaded structural components, springs, paper clips, spokes for wheels, and stringed musical instruments. Although similar in process, drawing is different from extrusion, because in drawing the wire is pulled, rather than pushed, through the die. Drawing is usually performed at room temperature, thus classified as a cold working process, but it may be performed at elevated temperatures for large wires to reduce forces.

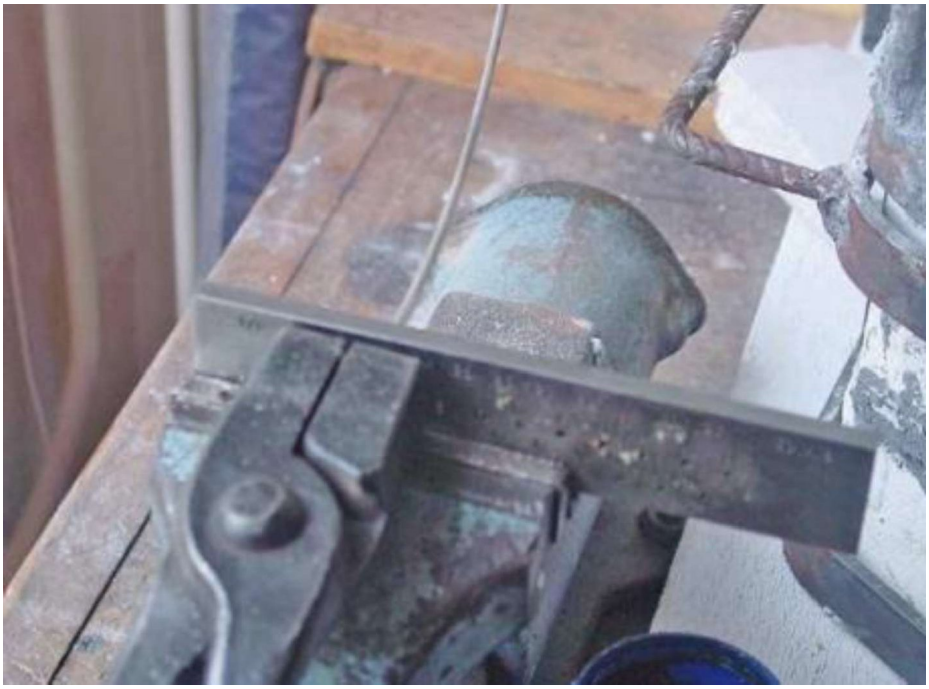

Wire Drawing

TUBE DRAWING Tube drawing is very similar to bar drawing, except the beginning stock is a tube. It is used to decrease the diameter, improve surface finish and improve dimensional accuracy. A mandrel may or may not be used depending on the specific process used.

Backgrounds

Conventional manufacturing processes such as machining, casting, assembly (fabrication), and metal forming finds applications in major automobile and aircraft industries. Among them metal forming as a technique has advantages over other manufacturing processes due its high precision in production of complex shapes with minimal material wastage and better mechanical properties. It has gained lot of importance in the past decade [1-2]. Metal forming is a process in which a metal block is being plastically deformed to a desired geometry. In order to obtain the deformation a force higher than the yield strength of the material is applied. Metal forming is a broad concept, can be classified into two major sections: bulk metal working processes and sheet metal working processes. Bulk metal deformation processes can be broadly of four types, namely, rolling, forging, extrusion and drawing. Forging and extrusion are frequently used forming processes since early 18th century [3]. Extrusion and forging having many advantages such as high dimensional accuracy, minimal or complete elimination of machining, good surface finish, better mechanical properties, quick production process and economic in comparison with other conventional manufacturing processes [4]. Extrusion and forging processes can be carried out under three working temperatures, namely, hot, cold and warm linked to recrystalization tempurature. Cold forging and extrusion processes have more advantages compared to hot and warm processes with respect to geometrical accuracy, surface finish and mechanical properties of the final component [5].

Different types of extrusion processes

Basically, cold extrusion is classified into four types depending on the relative movement of the punch and extruded product [6]. They are: forward (Direct) extrusion, backward (indirect) extrusion, radial (lateral) extrusion and impact extrusion [7].

Direct (Forward) extrusion

Forward extrusion process, represented in Figure 1.1, is the most common method used in the industries to manufacture long products of uniform cross-section. In this type of extrusion, the ram moves in the same direction of the extruded product. There is a relative movement between the

billet and container, leading to high frictional forces. Friction at the die and container wall increases the extrusion load requirements than that for indirect extrusion.

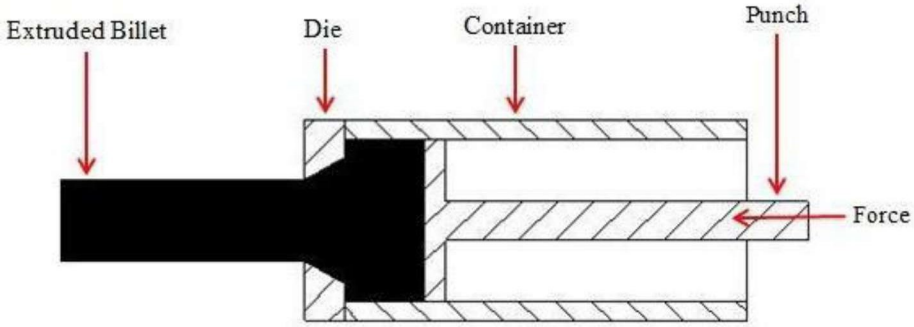

Figure 1.1: Direct extrusion

Indirect (Backward or Reverted) extrusion

In this type of extrusion, the billet does not move relative to the container. A die fixed on a hollow ram which is pushed against the billet, leading to flow of the extruded section in opposite direction to the ram movement shown in Figure 1.2. Frictional force between billet and container interface is thus eliminated during indirect extrusion. Alternatively, the closed container end in backward extrusion can be forced to move against die and ram assembly.

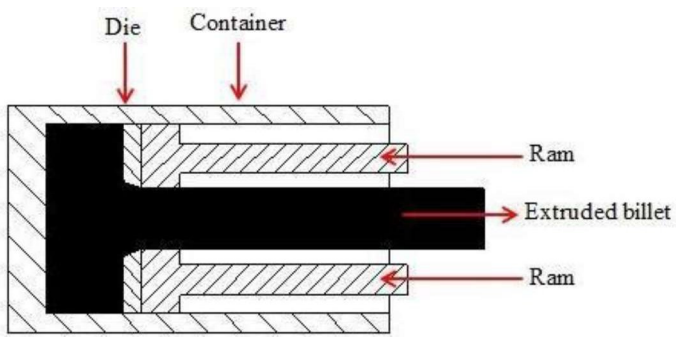

Figure 1.2: Indirect extrusion

Radial (Lateral) extrusion

In this type of extrusion, the material flow perpendicularly to the direction of the punch movement as shown in Figure 1.3. Due to the change in metal flow direction additional power is required to overcome the friction at the die-billet interface. These types of extrusions are commonly used for production of flange type components.

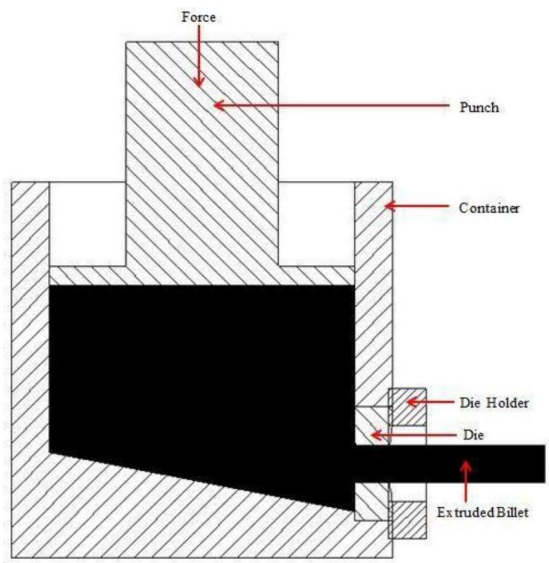

Figure 1.3: Radial extrusion

Impact extrusion

This process (illustrated in Figure 1.4) is similar to backward/indirect extrusion process represented in Figure 1.2. The punch runs down quickly on the blank which gets revert extruded the punch to obtain a tubular section. The length of the tube depends on the size of the blank. Toothpaste tubes are an excellent example of this process.

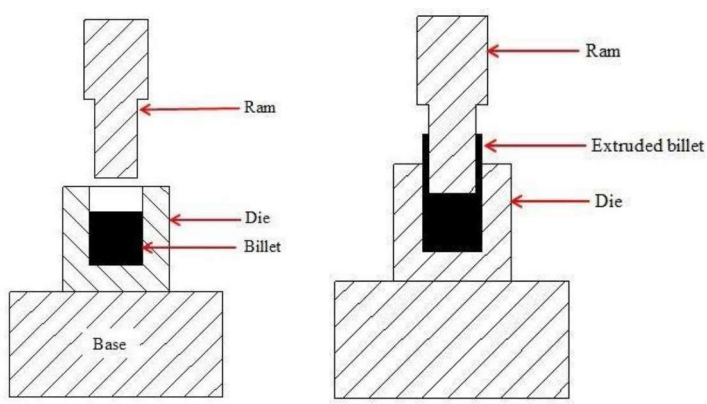

Figure 1.4: Impact extrusion

Hydrostatic extrusion

Besides these four types of extrusion processes, we also have hydrostatic extrusion method in which the billet in the container is extruded through the die by the action of a hydrostatic liquid pressure medium rather than by direct application of the load with a ram represented in Figure 1.5.

The billet is surrounded by a hydrostatic fluid, which is sealed off and is pressurized sufficiently to extrude the billet through the die. This process can be done hot, warm, or cold, however; the temperature is limited by the stability of the fluid used. This method can be used to extrude brittle materials that cannot be processed by conventional extrusion since ductility of the material is improved by applying hydrostatic pressure.

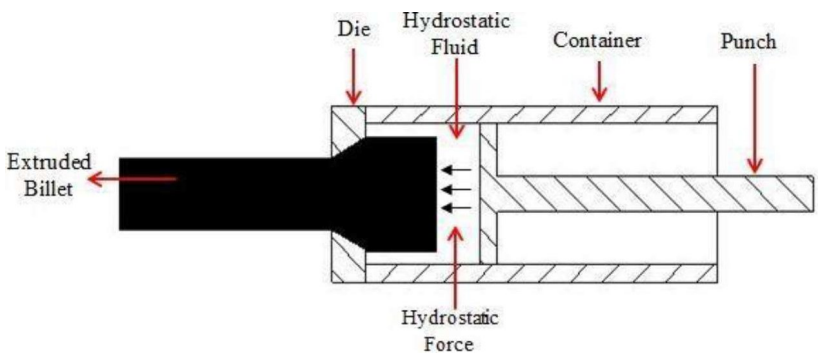

Figure 1.5: Hydrostatic extrusion

Different types of forging processes

According to the nature of the applied force, forging is classified as:

Hammer/drop forging: The applied force is impact type.

Press forging: Load is applied gradually.

Based on the nature of material deformation or direction of applied force forging process is divided as:

Upset forging

In this process, force is applied parallel to the length direction**.** This is the operation of increasing the cross section at the expense of length. Heads of nails, bolts and other hardware products are formed through this technique as shown in Figure 1.6.

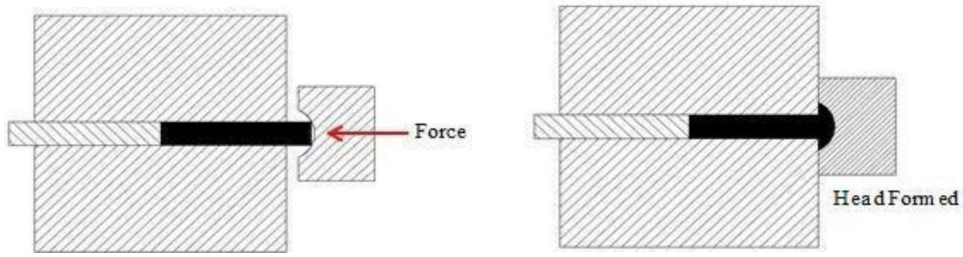

Figure 1.6: Upset forging

Drawing out: In this process, force is applied perpendicular to the length axis of the billet**.** This is the operation in which cross section area decreases with increase of length.

Based on the geometry of the dies by which material is compressed to get a shape forging process is divided as:

Open die forging

In this type, the work is compressed between two flat dies, allowing metal to flow freely laterally with minimum constraint which is shown in Figure 1.7. These types of operations are performed for initial breakdown of the billet.

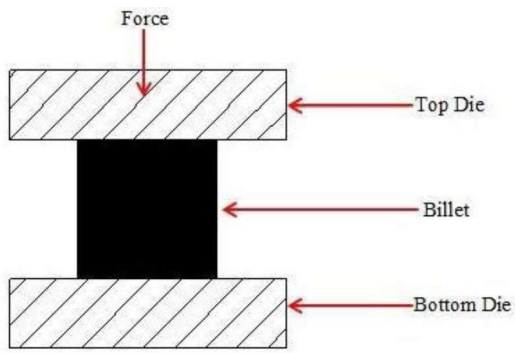

Figure 1.7: Open die forging

Closed die or Impression die forging

In this type of process, the work piece is compressed between two die halves which carry the impressions of the desired shape that is to be imparted on the work piece shown in Figure 1.8. Metal flow is constrained and we get a multidirectional unbroken grain flow inside the product giving better mechanical properties. The extra metal is expelled out as flash mostly at parting line.

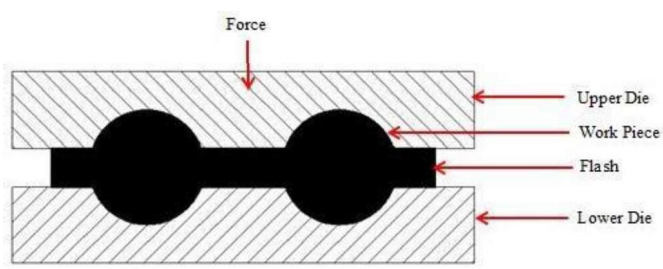

Figure 1.8: Closed die forging

Flashless forging

In this type of forging the volume of the workpiece is equal to the volume of the die cavity, with no requirement of flash arrangement as shown in Figure 1.9.

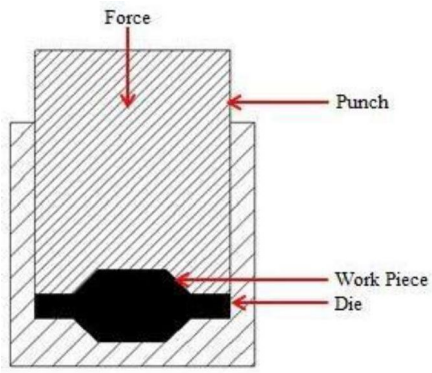

Figure 1.9: Flashless forging

Combined extrusion forging processes

Because of industrial requirements various operation's, such as, direct and indirect extrusion and forging are combined to get complex shapes.

Combined forward and backward extrusion (CE)

In this combine process backward and forward extrusion takes place simultaneously as shown in the Figure 1.10.

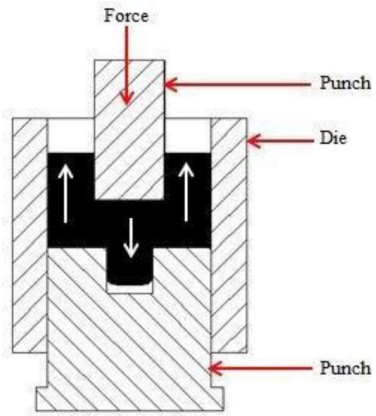

Figure 1.10: Forward-backward extrusion process

Combined extrusion-forging (CEF)

In this type of operation both extrusion and forging takes place simultaneously. As shown in Figure 1.11, forward extrusion takes place for forming of the shaft and forging takes place to form a flange. This process is also called cold heading with forging.

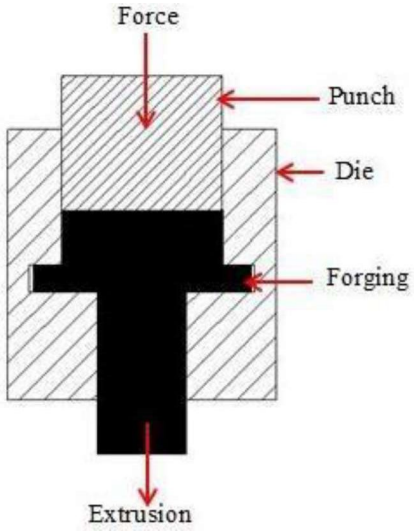

Figure 1.11: Extrusion-forging process

Existing Manufacturing and Modern Industry Demand

The conventional metal extrusion and forging routes have gained importance involving single process (forward or backward extrusion, upsetting or closed die forging) for its manufacturing ability of components with better mechanical properties because of unbroken and multidirectional grain flow directions. The major hindrances encountered by the present manufacturing industries are to produce complex profiles with better surface finish, near net shape in one pass and improved mechanical properties. Due to the ever increasing demand of components with intricacy features single route is not sufficient to manufacture those parts, which lead to the significance of the combined extrusion-forging process.

In combined extrusion-forging technique, a billet is forced by a ram through the dies to flow in the same, opposite and perpendiclar directions with respect to ram movement to obtain the desired shape. The beauty of this process is that two or more forming processes (different type of extrusion and forging) takes place simultaneously. Thereby, reducing the capital investment and we can obtain net or near-net shape product can be obtained by single ram movement at single station. Combined extrusion-forging (CEF) has drawn the attention of automobile, aircraft

industries and received industrial significance due to higher productivity, decrease in material wastage, better mechanical properties when compared to the existing conventional processes. Along with that, complex shapes can also be manufactured with ease, otherwise casting and machining are the present routes of manufacturing.

In the current market requirements, the use of complex aluminium sections are getting larger scope due to its properties of durability, wear resistance, low weight, etc. [8]. Combined extrusion–forging plays a very vital role for the production of near-net shaped products [9]. Metals like aluminium and aluminium based alloys play a predominant role in the cold CEF & CE processes. Due to the presence of high compressive stress, it minimizes cracks in the material in the initial breakdown of the ingot. Further, cold CEF is commercially preferred as it avoids complex tooling.

Although combined extrusion-forging has the ability to represent a better solution, analysis of this process has gained less importance till date due to its complexity nature.

1.1 Conventional Dies

Dies are the replica of the profile which is to be extruded or forged. Those are used as mould/tooling device in manufacturing process for the extrusion, forging and combined extrusion-forging of profiles. The dies used should have higher mechanical characteristics, should be strong enough and have the ability to hold the dimensional accuracy during elevated stresses. In general, tool steels are used as metal extrusion/forging dies. High-grade alloy steels with coatings having higher wear resistance are also used for dies. For higher accuracy and wear resistance sometime carbides are also used as die materials. The essential technical requirements for fabrication of dies are:

- Die angle is an important factor for the material flow, which influences the force requirement. Although, accurate die angle is difficult to establish due to the influence of temperature and lubrication.
- The die design should consider the flash formation for the finishing operations, fillet, corner radii, and shrinkage.

Types of Dies

In general, dies are of three types, namely, flat faced dies, conical dies and curved dies.

Flat faced or square dies (Figure 1.12)

- These dies are most preferred in the industry due to its simple design and low cost.
- Flat faced dies are used to extrude simple designs of hard and tough metal.
- These dies form dead metal zones due to which the metal shears internally which form its own dies angle.
- Difficult for lubrication.

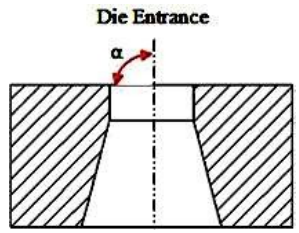

Figure 1.12: Square die

Taper or conical dies (Figure 1.13)

- These dies have an entrance angle for metal flow.
- Dead metal zones are not present in these dies.
- Low frictional force is present when compared to the flat faced dies.
- Lubrication is easy.

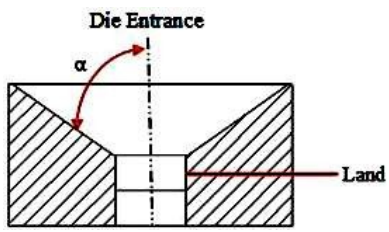

Figure 1.13: Taper die

Curved dies (Figure 1.14)

- Friction loss and redundant work can be minimized
- It can be cosine, sine, elliptic, circular, hyperbolic, polynomial etc.

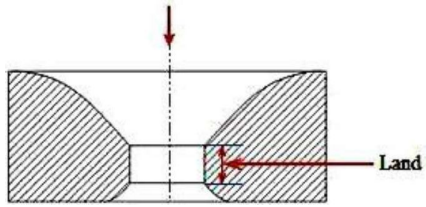

Blanking is a process in which the punch operation removes a final product from a larger piece of sheet metal.

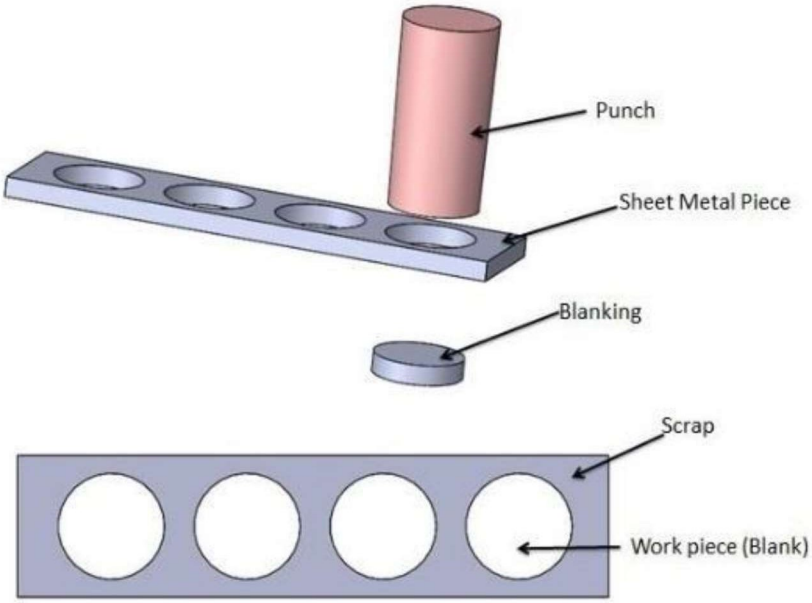

Punching is a material removal process in which the punch operation removes material from a final piece of sheet metal.

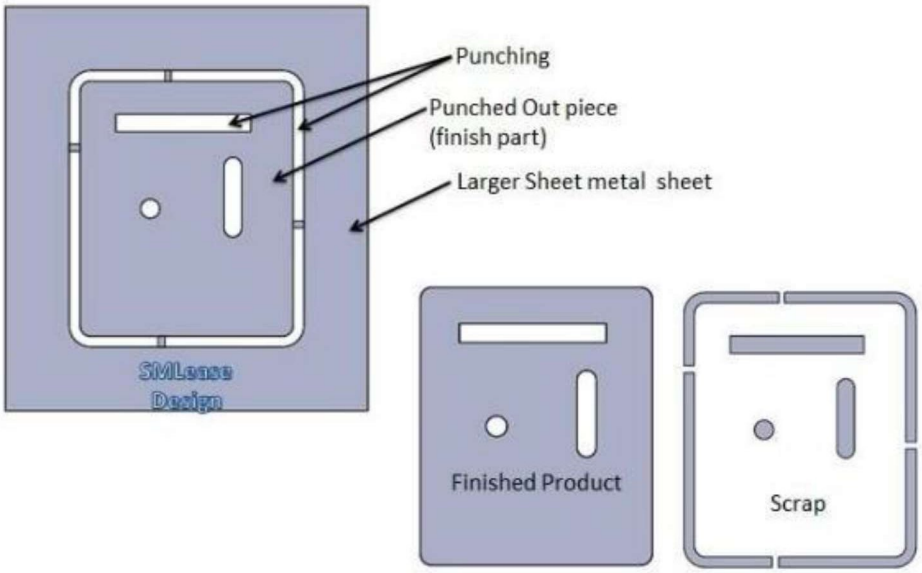

Piercing is process in which punch operation cuts a hole / material by tearing operation from a final piece of sheet metal. Piercing is a blanking operation

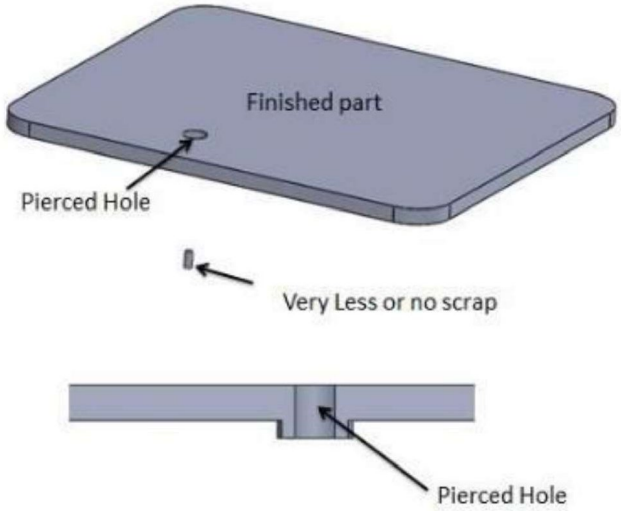

Metal Spinning:

The metal spinning process starts with special machinery that produces rotationally symmetrical (i.e. cone-shaped) hollow parts; usually from circular blanks. Shear forming, a related process where parts are formed over a rotating conical mandrel, can be used to produce not only cone-shaped parts but also elliptical or other concave or convex parts. Often, shear forming is used in conjunction with metal spinning. Metal spinning is used as a replacement for the stamping and deep drawing processes.

The metal spinning process starts with a sheet metal blank which rotates on a lathe. The metal disc is pressed against a tool (called a mandrel or a chuck) with a tailstock. The metal disc, tailstock and tool rotate in a circular motion and a roller presses against the metal to form the metal over the tool through a series of passes by the roller. The resulting part is a piece that duplicates the exterior portion of the tool it was formed on. The basic shapes in metal spinning are cones, flanged covers, hemispheres, cylindrical shells, venturis and parabolic nose shapes.

Metal spinning yields pots and pans, vases, lamp shades, musical-instrument parts and trophies. Automotive parts include wheel discs, rims, hubcaps and clutch drums. Other examples include radar reflectors, parabolic dishes, hoppers, concrete-mixer bodies, drums, pressure bottles, tank ends, compensator and centrifuge parts, pulleys, hydraulic cylinders, engine inlet rings and a variety of jet-engine and missile parts.

Some of the advantages of metal spinning include -

1. Low capital-investment
2. Low tooling and energy costs

3. Short setup times
4. Quick and inexpensive adaptation of tooling and methods to accommodate design changes
5. Ability to carry out other operations such as beading, profiling, trimming and turning in the same production cycle with one setup.
6. Forming forces are appreciably lower than competing processes due to localized working.
7. Economical for one-off parts; prototypes; and small, medium and high volumes.
8. Any sheet material that can be cold formed is a candidate for metal spinning including - cold rolled steel, hot rolled steel, aluminum, stainless steel, brass, copper and exotic metals such as titanium, inconel, and hastealloy.

Tooling for spinning is relatively inexpensive and simple to employ, translating to a short lead time for parts. Tight tolerancing requirements may require secondary operations, but the advent of automated spinning machines allows more precise forming than with manual spinning machines, with less reliance on operator skill.

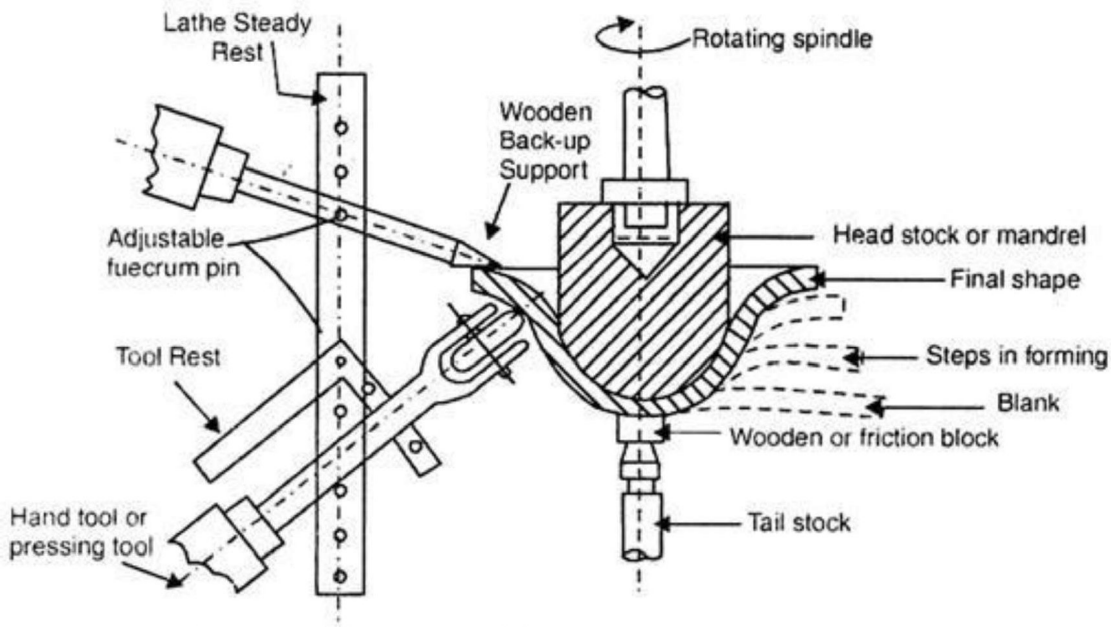

Fig. 8.1. A Schematic of the spinning operation.

The Spinning process is classified in two types i.e., hot-spinning and cold-spinning, depending upon whether the blank or work piece has been heated before spinning or not.

(i) Hot Spinning:

In hot spinning, the metal blank is heated to forging temperature and then forming it into the desired shape.

A blunt pressing tool is used which contacts the surface of the rotating part and causes the flow of metal over the form mandrel. This method is generally used for thicker plates and sheets, which do not plastically de-formed at room temperature by pressing tool.

In order to avoid wrinkling at the outer edge a back-up support (hard wood bar) opposite to the tool is used, when working with relatively thin sheets. Hot spinning produces parts such as heads for pressure vessels, refinery equipment's and large tanks.

(ii) Cold Spinning:

Cold spinning process is similar to hot spinning except that the metal blank is worked at room temperature. This method is generally best suited for thin plates and sheets of aluminum and other soft metals.

Cold spinning produces parts such as light reflectors, cooking utensils, liquid containers, radial engine cowling, domestic use hollow parts etc.

Drawing:

Drawing is a process of cold forming a flat precut metal blank into a hollow vessel without excessive wrinkling, thinning, or fracturing. The various forms produced may be cylindrical or box shaped, with straight or tapered sides or a combination of straight, tapered, and curved sides. The parts may vary from 1/4" (6mm) diam parts or smaller to aircraft or automotive parts large enough to require mechanical handling equipment.

Drawing is a process of cold forming a flat precut metal blank into a hollow vessel without excessive wrinkling, thinning, or fracturing. The various forms produced may be cylindrical or box shaped, with straight or tapered sides or a combination of straight, tapered, and curved sides. The parts may vary from 1/4" (6mm) diam parts or smaller to aircraft or automotive parts large enough to require mechanical handling equipment.

The **deep drawing process** is simply defined as the stretching of sheet metal stock, commonly referred to as a blank, around a plug. The edges of the metal blank are restrained by rings and the plug is deep drawn into a top die cavity to achieve the end shape that is desired. There are many shapes that can be made through deep drawing and stamping including --

1. cups
2. cans
3. pans
4. cylinders
5. domes
6. hemispheres
7. tubes
8. hoppers
9. Irregular shaped products.

Wire drawing is a metalworking process used to reduce the cross-section of a wire by pulling the wire through a single, or series of, drawing die(s). There are many applications for wire drawing, including electrical wiring, cables, tension- CREC Department of Mechanical Engineering Page 54 loaded structural components, springs, paper clips, spokes for wheels, and stringed musical instruments. Although similar in process, drawing is different from extrusion, because in drawing the wire is pulled, rather than pushed, through the die. Drawing is usually performed at room temperature, thus classified as a cold working process, but it may be performed at elevated temperatures for large wires to reduce forces.

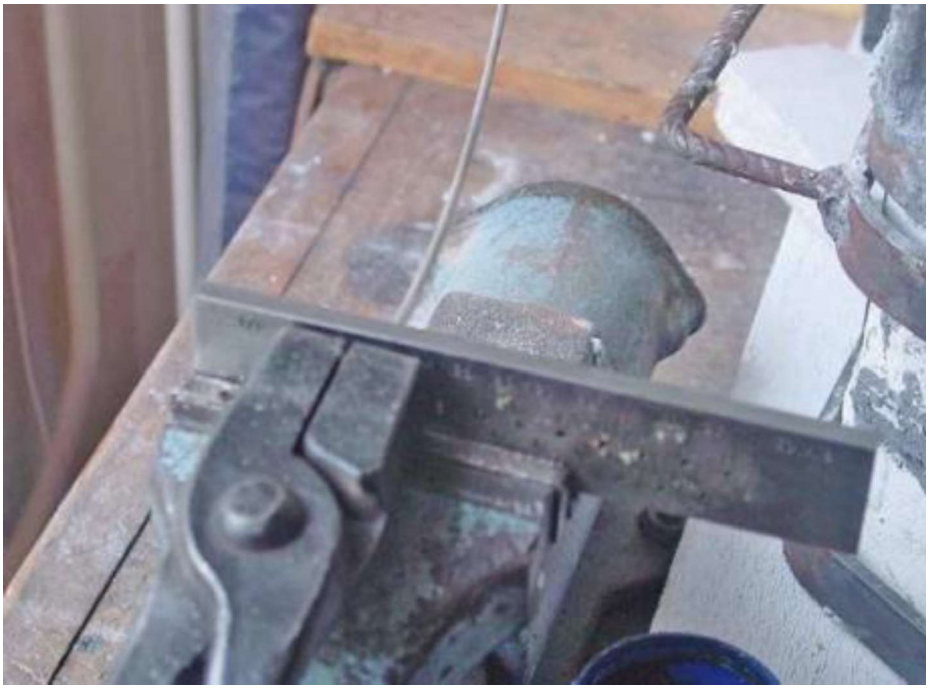

Wire Drawing

TUBE DRAWING Tube drawing is very similar to bar drawing, except the beginning stock is a tube. It is used to decrease the diameter, improve surface finish and improve dimensional accuracy. A mandrel may or may not be used depending on the specific process used.

UNIT V

ADDITIVE MANUFACTURING

Unit.5

Introduction to Rapid Prototyping, Material, Applications, Limitations, Classification of Rapid Manufacturing Process, Traditional Prototyping Vs Rapid Prototyping.

Introduction:

The current marketplace is undergoing an accelerated pace of change that challenges companies to innovate new techniques to rapidly respond to the ever- changing global environment. A country's economy is highly dependent on the development of new products that are innovative with shorter development time Organizations now fail or succeed based upon their ability to respond quickly to changing customer demands and to utilize new innovative technologies.

Prototype:

It is the first or preliminary version of a product from which other forms are developed. It is a model from which further models and eventually the final product will be derived.

Rapid Prototyping:

The term rapid prototyping (RP) refers to a class of technologies that can automatically construct physical models from Computer-Aided Design (CAD) data.

It is a process for rapidly creating a system or part representation before final release or commercialization.

It is a process for fabricating of a physical, three – dimensional part of arbitrary shape directly from a numerical description (typically a CAD model) by a quick, totally automated and highly flexible process.

Alternative names for RP:

Additive Manufacturing

Layer Manufacturing

Direct CAD Manufacturing

Solid Freeform Fabrication

Traditional Prototyping Vs. Rapid Prototyping:

Traditional Prototyping	Rapid Prototyping
It could include building a model from CLAY, carving from wood, bending wire meshing etc.	It could include building a model from thermoplastic, photopolymer, metals, paper, titanium alloys etc.
These methods are time consuming.	These methods consume less time.
Lack the quality to serve its purpose.	Gives better quality.
It can effectively evaluate the alternative design concepts in the design product definition stage.	It can effectively evaluate the alternative concepts in the product definition stage.
Generally these methods are performed manually.	Generally these methods are performed automatically.
Increases product launch time.	Reduces product launch time.

- **Classification of Rapid Prototyping Systems**

Fundamentally, the development of RP can be seen in four primary areas.

The Rapid Prototyping Wheel as shown in below figure depicts these four key aspects of Rapid Prototyping. They are: Input, Method, Material and Applications.

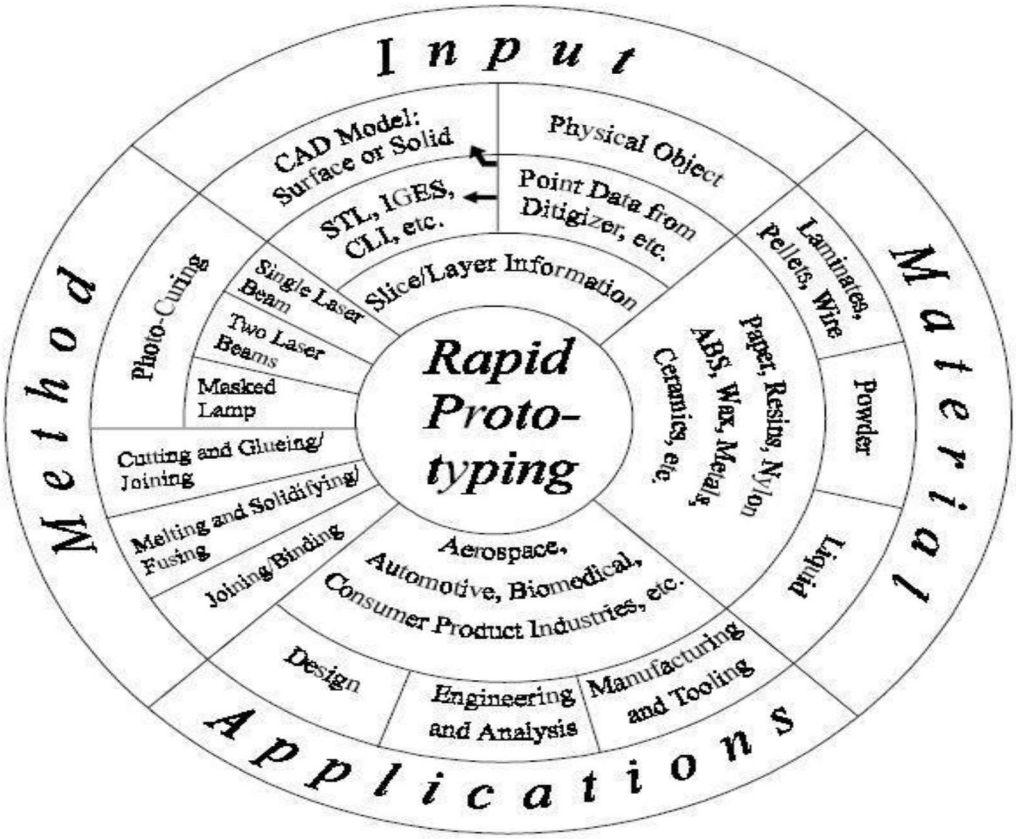

The Rapid Prototyping Wheel

While there are many ways in which one can classify the numerous RP systems in the market, one of the better ways is to classify RP systems broadly by the initial form of its material, i.e. the material that the prototype or part is built with.

In this manner, all RP systems can be easily categorized into

(1) liquid-based (2) solid- based and (3) powder-based.

1.3.1 Liquid-based RP systems

Liquid-based RP systems have the initial form of its material in liquid state.

Through a process commonly known as curing, the liquid is converted into the solid state.

The following RP systems fall into this category:

1) 3D Systems' Stereo lithography Apparatus (SLA)
2) Cubital's Solid Ground Curing (SGC)
3) Sony's Solid Creation System (SCS)
4) CMET's Solid Object Ultraviolet-Laser Printer (SOUP)
5) Autostrade's E-Darts
6) Teijin Seiki's Soliform System
7) Meiko's Rapid Prototyping System for the Jewelry Industry
8) Denken's SLP
9) Mitsui's COLAMM
10) Fockele & Schwarze's LMS
11) Light Sculpting
12) Aaroflex
13) Rapid Freeze
14) Two Laser Beams
15) Micro fabrication

Each of these RP systems will be described in more detail in next chapters.

Following table shows some important RP systems and materials used for that particular technology.

Table 1.2 RP systems and related base materials

Prototyping Technologies	Base Materials
Selective laser sintering (SLS)	Thermoplastics, Metals powders
Fused Deposition Modeling (FDM)	Thermoplastics, Eutectic metals.
Stereo lithography (SLA)	Photopolymer
Laminated Object Manufacturing (LOM)	Paper
Electron Beam Melting (EBM)	Titanium alloys
3D Printing (3DP)	Various materials

Additive manufacturing Techniques:

1. Laser Engineered Net Shaping (LENS)

The LENSTM process builds components in an additive manner from powdered metals using a Nd: YAG laser to fuse powder to a solid as shown in Figure 5.15. It is a freeform metal fabrication process in which a fully dense metal component is formed. The LENSTM process comprises of the following steps.

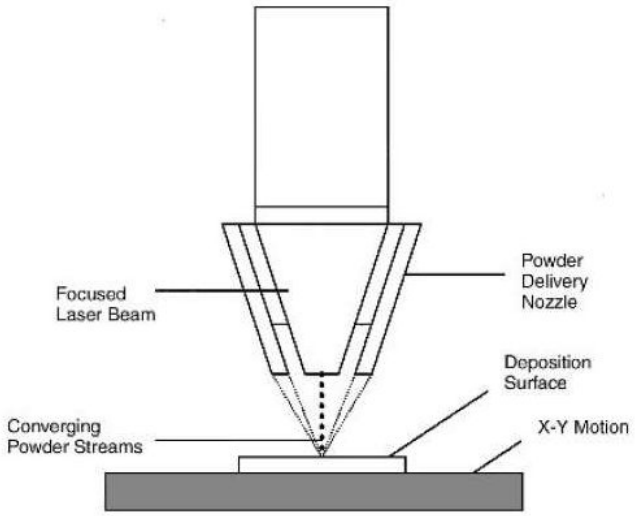

Steps

A deposition head supplies metal powder to the focus of a high powered Nd:YAG laser beam to be melted. This laser is typically directed by fiber optics or precision angled mirrors.

The laser is focused on a particular spot by a series of lenses, and a motion system underneath the platform moves horizontally and laterally as the laser beam traces the cross-section of the part being produced.

The fabrication process takes place in a low-pressure argon chamber for oxygen-free operation in the melting zone, ensuring that good adhesion is accomplished.

When a layer is completed, the deposition head moves up and continues with the next layer. The process is repeated layer by layer until the part is completed. The entire process is usually enclosed to isolate the process from the atmosphere. Generally, the prototypes need additional finishing, but are fully dense products with good grain formation.

Principle

The LENS process is based on the following two principles:

A high powered Nd: YAG laser focused onto a metal substrate creates a molten puddle on the substrate surface. Powder is then injected into the molten puddle to increase material volume.

A "printing" motion system moves a platform horizontally and laterally as the laser beam traces the cross-section of the part being produced. After formation of a layer of the part, the machine's powder delivery nozzle moves upwards prior to building next layer.

Advantages

Superior material properties. The LENS process is capable of producing fully dense metal parts. Metal parts produced can also include embedded structures and superior material properties. The microstructure produced is also relatively good.

Complex parts. Functional metal parts with complex features are the forte of the

LENS system.

Reduced post-processing requirements. Post-processing is minimized, thus reducing cycle time.

Disadvantages

Limited materials. The process is currently narrowly focused to produce only metal parts.

Large physical unit size. The unit requires a relatively large area to house.

High power consumption. The laser system requires very high wattage.

2. Direct Metal Deposition (DMD)

A direct laser deposition (DLD) or direct metal deposition (DMD) process is a laser- assisted direct metal manufacturing process that uses computer controlled lasers that, in hours, weld air blown streams of metallic powders into custom parts and manufacturing molds. Some processes use wire instead of powder, but the concept is similar.

A representative process is called the Laser Engineered Net Shaping (LENS) process. It uses CAD file cross-sections to control the forming process developed by Optomec Inc. The DLD process can be used throughout the entire product life-cycle for applications ranging from materials research to

An additional benefit is its unique ability to add material to existing components for service and repair applications. Powder-metal particles are delivered in a gas stream into the focus of a laser to form a molten pool of metal. It is a layer-by-layer additive rapid prototyping process. The DLD process allows the production of parts, molds, and dies that are made out of the actual end-material, such as aluminum or tool steel. In other words, this produces the high-temperature materials that are difficult to make using the traditional RP processes.

The laser beam is moved back and forth across the part and creates a molten pool of metal where a precise stream of metal powder is injected into the pool to increase its size. This process is the hybrid of several technologies: lasers, CAD, CAM, sensors, and powder metallurgy. This process also improves on other methods of metalworking in that there is no waste material or subtractive processes necessary. It can also mix metals to specific standards and specifications in a manner that has never been possible before.

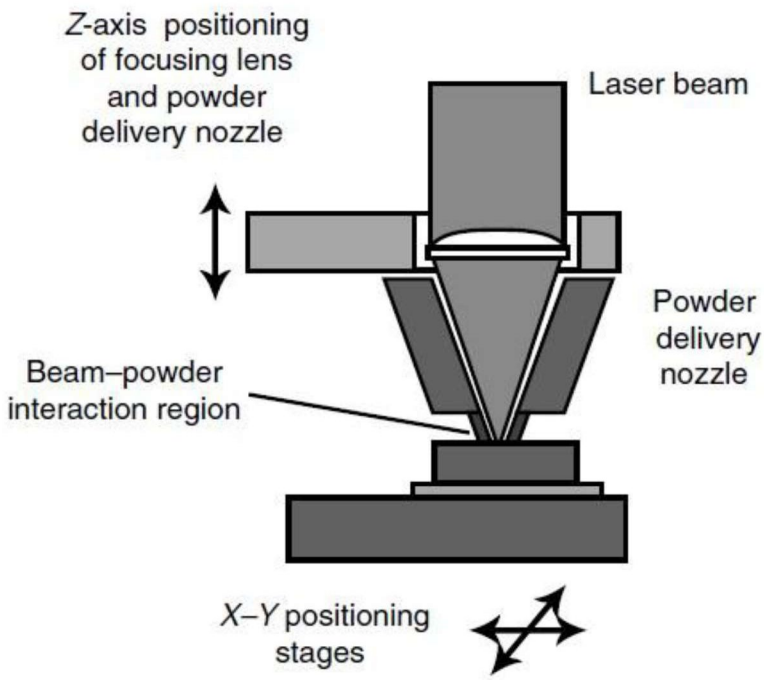

Advantages:

The strength of DLD lies in the process' ability to fabricate fully dense metal parts with good metallurgical properties at reasonable speeds.

DLD is an efficient approach that reduces production costs and speeds time to market for high-value components.

The DLD systems enable the fabrication of novel shapes, hollow structures, and material gradients that are not otherwise feasible.

Disadvantages:

re is a limit to the overhang angle that can be built.

The traditional DLD or RP processes are using three-axis tables, and thus support structures are very often needed in building overhang parts. These structures are not desirable in laser-based processes involving metals. One could use a high melting- point material to build the support structures and use other processes, such as chemical etching, to remove the support material afterward.

3.Sheet Lamination (Laminated Object Manufacturing (LOM):

There are two approaches of LOM process.

I. Cut and then paste

Handling the cut pieces is difficult if not impossible since

More than one piece may have to be handled for every layer

Such pieces may be odd-shaped

Paper being flexible further complicates handling

A support mechanism will be required.

Suitable for laminated tooling.

II. Paste and then cut

Handling is easy – indexing of the reel is all that is required.

The remaining stock acts as the support material.

The only drawback is the time-consuming decubing operation.

Suitable for paper-like flexible materials.

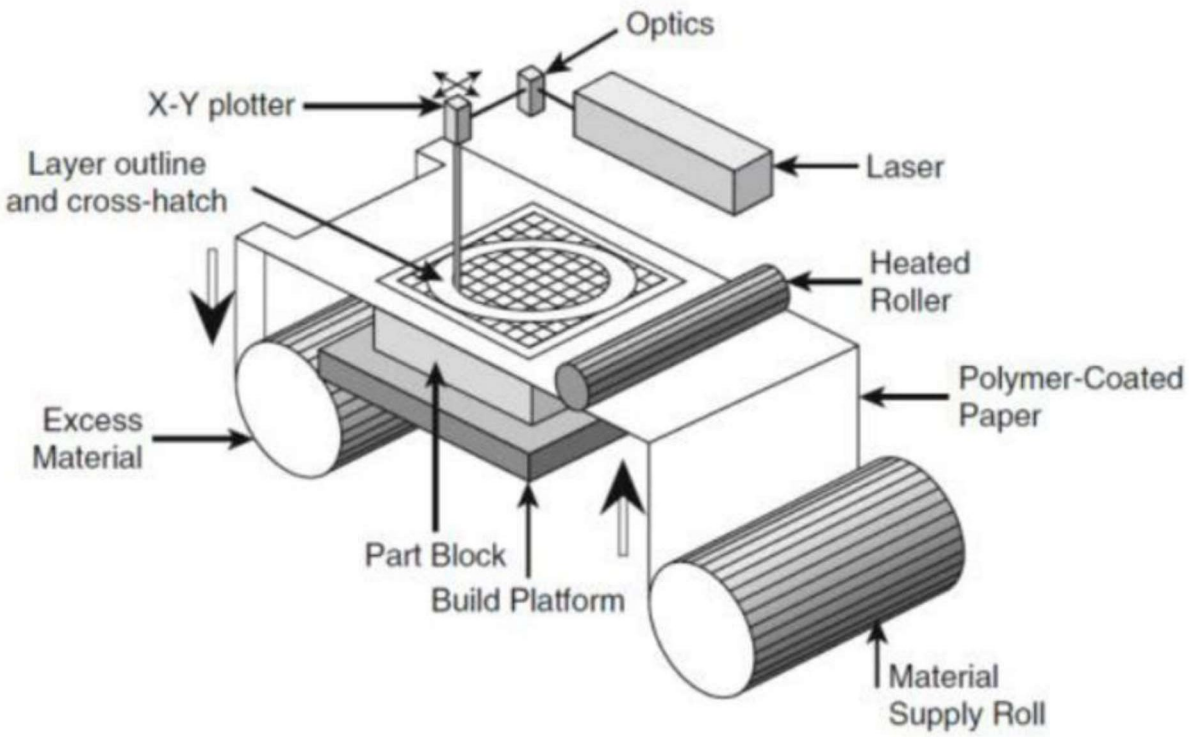

Steps

If multiple parts are to be made, one has to arrive at a cluster of optimal packing (an automatic program for this is still not available!). It is preferable to pack as many pieces as possible in processes such as LOM, SLS, SGC and 3DPrinitng.

The object/ cluster is positioned and oriented in the desired place. Some users tilt it by 10 to 15 deg. to avoid any surface becoming horizontal (why?).

Set the machine with the desired process parameters such as beam diameter, beam offset flag, grid sizes, number of dummy layers, bridging gap between two cuts etc.

Load the paper roll of appropriate width.

Identify the location for the build on the table and feed it to the machine. Paste a double-sided adhesive in that zone.

<u>Each slice or layer is realized using the following steps:</u>

- The paper reel indexes by a fixed distance. It has adhesive at the bottom surface.
- The table rises to the required height.
- A hot roller (laminating tool) rolls over it causing it to stick to the previous layer.
- The height is measured and it is passed on to the slicing software.
- The loops of the slice are cut by the laser. It is possible to offset the laser beam by beam radius in such a direction as to compensate for it.
- This is followed by grid cutting around the bounding box of the stock. Note that the grids of all layers coincide. Finally, a parting off cut is made.
- The table lowers by a considerable distance so that the cut portion is stripped off from the reel.

lume is a rectangular block. This is parted off from

called ‘decubing’. This operation takes several hours.

The part is finished and painted as required. It can be given a lacquer coat to prevent it from absorbing moisture.

Advantages

- Only boundaries are to be addressed and not their interiors.
- It employs CO2 laser which is cheaper. No protective environment is required.
- Paper is very cheap.
- It gives strong wood-like parts. Ideal as patterns for casting

Limitations

- Grid cutting takes much more time than object cutting.
- Decubing also is time-consuming.
- Horizontal surfaces pose problems. Although it is solvable, it has not been done till date.

4. 3D Printing

Very similar to SLS except that a binder liquid is spayed in selected regions instead of laser. Raw material is powder. Concept models can be prepared rapidly using a multi-jet multi-color spray over starch (ZCorp). Green parts will require sintering inside another furnace.

When a binder is sprayed through thin nozzles on the selected region over a layer of powder, the particles in that region stick together. The remaining powder acts as support as in the case of LOM.

Binder spray makes use of mechanical movement. However, use of multiple jets make it faster. Explicit support structures are not required. A wide variety of powders can be used.

Steps

Raw material is powder.

The binder liquid is selectively deposited on the layer of powder.

This is followed by a curing after which unbound powder is separated.

4. Fused Deposition Modeling (FDM)

Molten material inside a hot chamber is extruded through a nozzle. Use of the raw material in wire form as a consumable piston is a great idea. he nozzle size alone does not decide the layer thickness and road width. They together depend on speed of head and wire feed speed. Their relation can be obtained from the principle of conservation of mass. (Analogy: applying tooth paste on the brush.)

Explicit support structures are required. Therefore, twin heads are used, one for model and the other for support.

Steps

Starting material is melted and small droplets are shot by a nozzle onto previously formed layer

Droplets cold weld to surface to form a new layer

Deposition for each layer controlled by a moving x-y nozzle whose path is based on a cross section of a CAD geometric model that is sliced into layers

Work materials include wax and thermoplastics

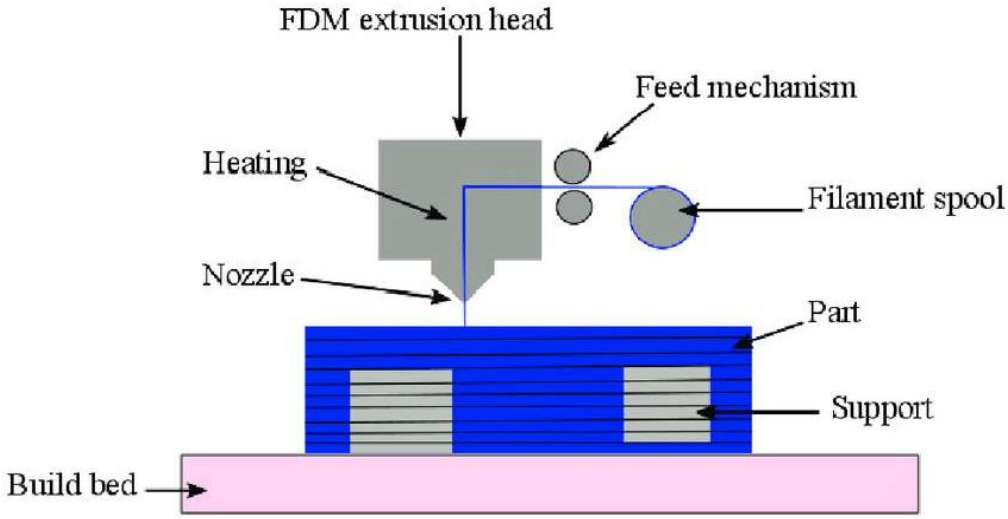

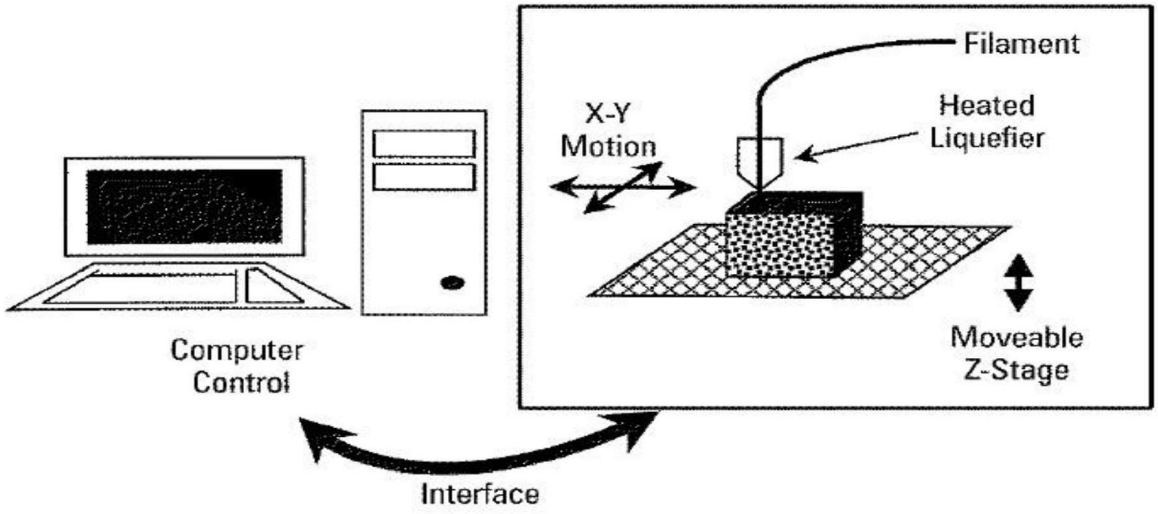

Advantages

- Any thermoplastic material can be used as long as the appropriate head is available.
- It does not employ lasers and hence no safety related issues.
- It does not use liquid.
- powder raw materials and hence clean. It can be kept in an office environment as a3D printer.
- Very easy to remove the support. This is probably the easiest of all RP processes.
- This is the cheapest machine. However, this is also due to their business policy since the costs of all RP machines are comparable.

Limitations

- As every point of the volume is addressed by a ‟mechanical device‟, it is very slow.
- Not very accurate compared SLA, SGC etc.

6. Electron Beam melting (EBM)

Electron beam melting (EBM) has become a successful approach to PBF (Powder Bed Fusion). In contrast to laser-based systems, EBM uses a high-energy electron beam to induce fusion between metal powder particles. This process was developed at Chalmers University of Technology, Sweden, and was commercialized by Arcam AB, Sweden, in2001.

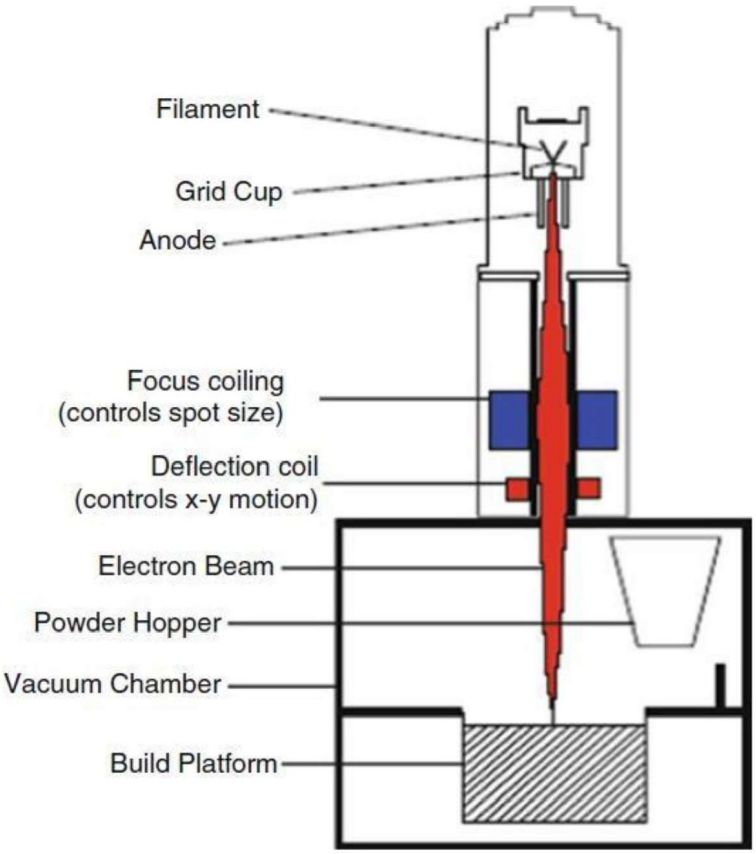

Laser beams heat the powder when photons are absorbed by powder particles. Electron beams, however, heat powder by transfer of kinetic energy from incoming electrons into powder particles. As powder particles absorb electrons they gain an increasingly negative charge.

This has two potentially detrimental effects:

(1) if the repulsive force of neighboring negatively charged particles overcomes the gravitational and frictional forces holding them in place, there will be a rapid expulsion of powder particles from the powder bed, creating a powder cloud (which is worse for fine powders than coarser powders) and

(2) increasing negative charges in the powder particles will tend to repel the incoming negatively charged electrons, thus creating a more diffuse beam. There are no such complimentary phenomena with photons. As a result, the conductivity of the powder bed in EBM must be high enough that powder particles do not become highly negatively charged, and

scan strategies must be used to avoid build-up of regions of negatively charged particles. In practice, electron beam energy is more diffuse, in part, so as not to build up too great a negative charge in any one location. As a result, the effective melt pool size increases, creating a larger heat-affected zone. ConsequentlyThe minimum feature size, median powder particle size, layer thickness, resolution, and surface finish of an EBM process are typically larger than for an mLS process.

As mentioned above, in EBM the powder bed must be conductive. Thus, EBM can only be used to process conductive materials (e.g., metals) whereas, lasers can be used with any material that absorbs energy at the laser wavelength (e.g., metals, polymers, and ceramics).

Electron beam generation is typically a much more efficient process than laser beam generation.

7. Selective laser Sintering (SLS)

It is developed by University of Texas, Austin.It is marketed by DTM, USA and EOS, Germany. Raw material is powder. Principle is similar to Powder Metallurgy but for the absence of compaction. Green part is prepared on the RP machine after partial sintering and sintering is completed inside another furnace.

Just as SLA, here also laser light is used. When it is scanned on the selected region over a layer of powder, the particles in that region fuse together. The remaining powder acts as support as in the case of LOM.

Laser beam is positioned using a small mirror capable of deflecting in two directions.

Therefore, this has very low inertia and hence high speed and accuracy.

The power of the laser decides the layer thickness.

Explicit support structures are not required.

A wide variety of powders can be used.

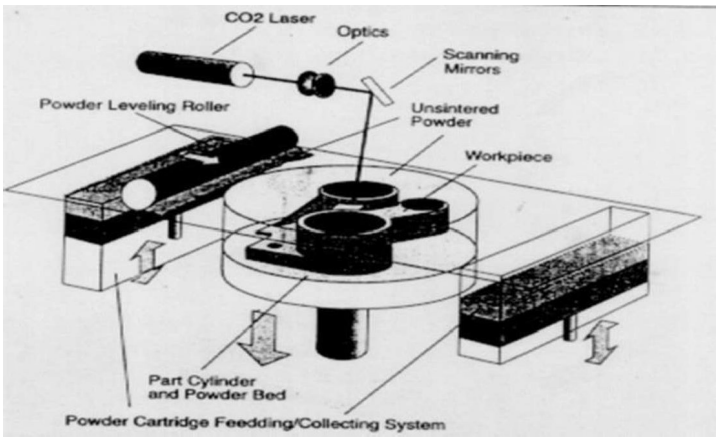

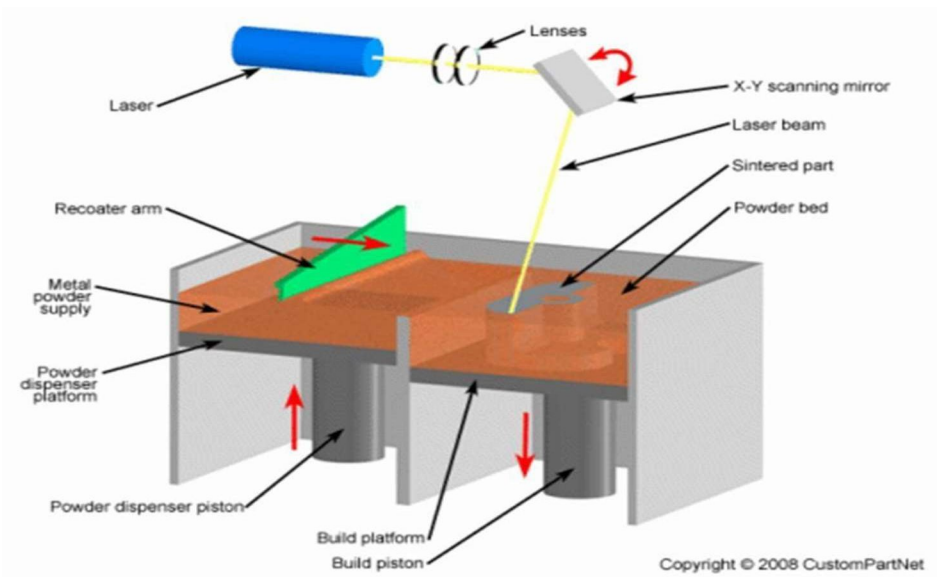

Steps

When the slicing is done, The working volume is maintained with appropriate temperature so that laser supplies the energy required to cross the threshold sintering temperature. An inert environment is created using continuous supply of gas such as Nitrogen. This is to minimize fire hazards as the fine particles have high activation.

Each slice or layer is realized using the following steps:

The table dips by a layer thickness.

A layer of powder is spread and leveled using a contra-rotating roller.

The beam scans the layer of powder. Thus, the required region is "selectively sintered"

After all layers are made, the table rises completely revealing a block of cake with the part inside.

The surrounding powder is soft and it is removed using suitable brushes. This powder is reusable.

The part is kept in a suitable hot chamber to complete the sintering.

The metallic prototypes require copper impregnation in another furnace to improve their polish ability.

The part is finished and painted as required.

Advantages

A wide variety of powders can be used.

Fast due to tiny moving mirror parts as in SLA.

Metallic parts can be made.

Suitable for making injection molding tools.

Limitations

Surface finish is less and dictated by the particle size.

Z accuracy is poor due to the absence of milling.

9.Photopolymerization (Stereo lithography (SL)

When a light of appropriate wave length falls on liquid photopolymer, the energy absorbed causes polymerization. The polymerized photopolymer will be in solid state. Laser light is used. When it is scanned on the selected region over a layer of liquid polymer, that region become solid. The remaining liquid can be drained.

Laser beam is positioned using a small mirror capable of deflecting in two directions. Therefore, this has very low inertia and hence high speed and accuracy. The power of the laser decides the layer thickness. Explicit support structures are required. This is achieved by modifying the geometry of the prototype. Typically bristles and thin structures are added.

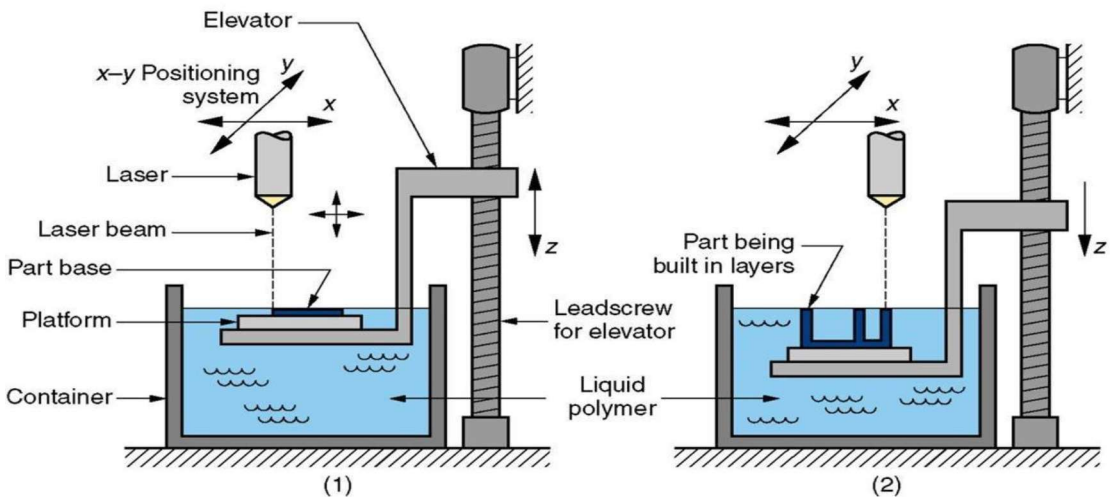

1. At the start of the process, in which the initial layer is added to the platform

2. After several layers have been added so that the part geometry gradually takes form.

Steps

Support structures are automatically added to the model wherever required.

Slicing is done.

Each slice or layer is realized using the following steps:

The table (called vat) dips and comes up to the required Z level.

A blade wipes off the excess liquid.

The beam scans the liquid layer. For each loop, the border is made and then area filling is done. Area filling is not in zig-zag pattern but in grids .

After all layers are made, the table rises completely revealing the part.

After the liquid has drained, it is removed from the table and the support structure is carefully cut off.

The part is kept in a post-cure apparatus where it is kept under UV radiation for an hour or so. This completes polymerization.

The part is finished and painted as required

R22

R22

Code No: R22A0311

MALLA REDDY COLLEGE OF ENGINEERING & TECHNOLOGY

(Autonomous Institution – UGC, Govt. of India)

II B.Tech II Semester Supplementary Examinations, November 2025

Manufacturing Processes

(ME)

Roll No										

Time: 3 hours **Max. Marks: 60**

Note: This question paper contains two parts A and B
Part A is compulsory which carries 10 marks and Answer all questions.
Part B Consists of 5 SECTIONS (One SECTION for each UNIT). Answer **FIVE** Questions, Choosing ONE Question from each SECTION and each Question carries 10 marks.

***

		PART-A (10 Marks) **(Write all answers of this part at one place)**	**BCLL**	**CO(s)**	**Marks**
1	A	Write the requirements of good pattern.	**L1**	**CO-I**	**[1M]**
	B	What are the applications of casting.	**L1**	**CO-I**	**[1M]**
	C	What is the working principle of plasma arc welding?	**L1**	**CO-II**	**[1M]**
	D	List any four welding defects.	**L1**	**CO-II**	**[1M]**
	E	List out the types of open die forging.	**L1**	**CO-III**	**[1M]**
	F	Define upsetting and drawing down in forging operation.	**L1**	**CO-III**	**[1M]**
	G	What is strain hardening?	**L1**	**CO-IV**	**[1M]**
	H	List two advantages of electromagnetic forming.	**L1**	**CO-IV**	**[1M]**
	I	Define Photopolymerization.	**L1**	**CO-V**	**[1M]**
	J	Mention two applications of Additive Manufacturing.	**L1**	**CO-V**	**[1M]**
		PART-B (50 Marks)			
		SECTION-I			
2	A	Recommend the basic rules to be followed in good casting design.	**L5**	**CO-I**	**[5M]**
	B	Explain the different types of defects in casting with a neat sketch?	**L4**	**CO-I**	**[5M]**
		OR			
3	A	What are the types of moulding sand and explain any two type of moulding sand	**L4**	**CO-I**	**[5M]**
	B	Explain ceramic mould casting with a neat sketch.	**L4**	**CO-I**	**[5M]**
		SECTION-II			
4	A	Explain friction welding with a neat sketch?	**L4**	**CO-II**	**[5M]**
	B	Explain with neat sketch about the principle of resistance welding.	**L4**	**CO-II**	**[5M]**
		OR			
5	A	Evaluate the equipment and operation of GTAW process.	**L5**	**CO-II**	**[5M]**
	B	Explain about the advantages and disadvantages of GTAW	**L4**	**CO-II**	**[5M]**

		SECTION-III			
6	A	Formulate the advantages and limitations of closed die forging.	**L6**	**CO-III**	**[5M]**
	B	Explain precision forging process.	**L4**	**CO-III**	**[5M]**
		OR			
7	A	Explain with neat sketches the process of tube drawing of metals.	**L4**	**CO-III**	**[5M]**
	B	Evaluate wire drawing.	**L5**	**CO-III**	**[5M]**
		SECTION-IV			
8	A	Describe coining and embossing with suitable diagrams.	**L2**	**CO-IV**	**[5M]**
	B	Discuss the Electro-Hydraulic Forming process with a neat sketch.	**L1**	**CO-IV**	**[5M]**
		OR			
9	A	Compare and contrast hot rolling and cold rolling processes.	**L5**	**CO-IV**	**[5M]**
	B	Explain Contour Roll Forming and how it differs from conventional rolling.	**L4**	**CO-IV**	**[5M]**
		SECTION-V			
10	A	Explain the process of Stereolithography (SLA) with a neat diagram and mention its applications.	**L3**	**CO-V**	**[5M]**
	B	Describe the Selective Laser Sintering (SLS) process and list its advantages and limitations.	**L3**	**CO-V**	**[5M]**
		OR			
11	A	Assess the advantages and disadvantages of Rapid Prototyping compared to conventional manufacturing.	**L5**	**CO-V**	**[5M]**
	B	Compare the accuracy, speed, and cost of different Additive Manufacturing techniques**.**	**L5**	**CO-V**	**[5M]**

***

Code No: R17A0311

R17

MALLA REDDY COLLEGE OF ENGINEERING & TECHNOLOGY

(Autonomous Institution – UGC, Govt. of India)

II B.Tech II Semester Regular Examinations, April/May 2019

Production Technology

(ME)

Roll No										

Time: 3 hours **Max. Marks: 70**

Note: This question paper Consists of 5 Sections. Answer **FIVE** Questions, Choosing ONE Question from each SECTION and each Question carries 14 marks.

****

SECTION-I

1 Explain Investment casting process and mention its advantages **[14M]**

OR

2 What are the types of patterns, patterns making materials and explain it **[14M]**

SECTION-II

3 Discuss the TIG welding process and its applications. **[14M]**

OR

4 Explain the importance of resistance welding in detail. **[14M]**

SECTION-III

5 Write a note on (a) Strain hardening (b) Recrystallisation **[14M]**

OR

6 Explain the concept of theory of rolling **[14M]**

SECTION-IV

7 Mention the types of sheet metal operations and explain bending operation **[14M]**

OR

8 Explain Deep drawing process and its features **[14M]**

SECTION-V

9 Explain basic Extrusion process and its characteristics **[14M]**

OR

10 Write a note on (a) Smith forging (b) Roll forging **[14M]**

****

Code No: R18A0311

R18

MALLA REDDY COLLEGE OF ENGINEERING & TECHNOL

(Autonomous Institution – UGC, Govt. of India)

II B.Tech II Semester Regular Examinations, October/November 2020

Manufacturing Processes

(ME)

Roll No										

Time: 2 hours **Max. Marks: 70**

Answer Any **Four** Questions

All Questions carries equal marks.

***

1 a) Briefly explain the basic steps involved in sand casting process.

b) What is pattern? What are the factors to be considered while selecting a pattern materials?

2 a) Explain squeeze casting technique, with suitable diagram.

b) Explain continuous casting process and mention its applications.

3 a) What is heat affected zone? State its characteristics.

b) Explain with neat sketches of a resistance welding process.

4 a) Explain in detail the gas metal arc welding process with a neat sketch.

b) Explain the principles of working of a laser beam welding process and list the various lasers used.

5 a) Discuss the advantages and limitations of hot and cold working process.

b) How do you estimate rolling load? What is the power required in rolling.

6 a) Distinguish between bending and forming. What are the different types of bending dies?

b) Explain the following terms applied to bending of sheet and plates.

i. Spring back

ii. Compensation for spring back.

7 (a) Describe impact extrusion with a neat sketch and mention its applications.

(b) Classify the methods of forging. Explain in detail any one of them.

8 a) Compare and explain the differences between conventional machining and rapid prototyping.

b) Explain with a neat sketch the working principle of Stereo-lithography (SLA) process with advantages and disadvantages.

****

R22

R22

Code No: R22A0311

MALLA REDDY COLLEGE OF ENGINEERING & TECHNOLOGY

(Autonomous Institution – UGC, Govt. of India)

II B.Tech II Semester Regular Examinations, June 2024

Manufacturing Processes

(ME)

Roll No										

Time: 3 hours **Max. Marks: 60**

Note: This question paper contains two parts A and B
Part A is compulsory which carries 10 marks and Answer all questions.
Part B Consists of 5 SECTIONS (One SECTION for each UNIT). Answer **FIVE** Questions, Choosing ONE Question from each SECTION and each Question carries 10 marks.

******

		PART-A (10 Marks) **(Write all answers of this part at one place)**	**BCLL**	**CO(s)**	**Marks**
1	A	Classify the different types of patterns.	**L2**	**CO-I**	**[1M]**
	B	What are the pattern materials?	**L1**	**CO-I**	**[1M]**
	C	Describe flame characteristics.	**L2**	**CO-II**	**[1M]**
	D	What is weld porosity? How is it caused?	**L1**	**CO-II**	**[1M]**
	E	List two main classifications of forging operations.	**l2**	**CO-III**	**[1M]**
	F	Describe the difference between piercing and punching in metal forming.	**l2**	**CO-III**	**[1M]**
	G	What is strain hardening in metals?	**L1**	**CO-IV**	**[1M]**
	H	What is high energy rate forming?	**L1**	**CO-IV**	**[1M]**
	I	What is rapid prototyping in the context of additive manufacturing?	**L1**	**CO-V**	**[1M]**
	J	What is a primary limitation of additive manufacturing in terms of material properties?	**L1**	**CO-V**	**[1M]**
		PART-B (50 Marks)			
		SECTION-I			
2	A	Describe the significance of patterns in the casting process. What are the main factors to consider when designing a pattern?	**L3**	**CO-I**	**[5M]**
	B	Analyze common casting defects, their causes, and the remedial measures that can be implemented to prevent these defects.	**L4**	**CO-I**	**[5M]**
		OR			
3	A	Describe the injection molding process with neat sketch.	**L3**	**CO-I**	**[5M]**
	B	Discuss the types of materials suitable for injection moulding process and the common products manufactured using injection moulding	**L3**	**CO-I**	**[5M]**
		SECTION-II			
4	A	Analyze various types of oxy-acetylene flames with sketches.	**L4**	**CO-II**	**[5M]**

	B	Evaluate the principle and application of Friction welding process.	**L5**	**CO-II**	**[5M]**
		OR			
5	A	Evaluate the effectiveness of laser beam welding in automotive manufacturing. How does it compare to traditional welding techniques in terms of precision and cost?	**L5**	**CO-II**	**[5M]**
	B	Describe the principles of spot welding and seam welding. How do these resistance welding processes differ in terms of application and efficiency?	**L3**	**CO-II**	**[5M]**
		SECTION-III			
6	A	Describe the different types of extrusion processes used in manufacturing. What are the key differences between them?	**L3**	**CO-III**	**[5M]**
	B	What is wire drawing and how does it differ from tube drawing in terms of process and applications?	**L3**	**CO-III**	**[5M]**
		OR			
7	A	Explain how water plasma cutting works and discuss its benefits over traditional mechanical cutting methods.	**L3**	**CO-III**	**[5M]**
	B	Explain the soldering and brazing processes and write merits, demerits and applications these two processes?	**L3**	**CO-III**	**[5M]**
		SECTION-IV			
8	A	Describe the bending process in metal forming. What are the key parameters that affect the quality of the bend?	**L4**	**CO-IV**	**[5M]**
	B	What are roll mills, and what role do they play in the rolling process?	**L2**	**CO-IV**	**[5M]**
		OR			
9	A	Explain the concept of strain hardening and its significance in metal forming.	**L2**	**CO-IV**	**[5M]**
	B	Explain the principle of electromagnetic forming and discuss its advantages over traditional mechanical forming methods.	**L3**	**CO-IV**	**[5M]**
		SECTION-V			
10	A	Explain the process of photopolymerization in additive manufacturing	**L4**	**CO-V**	**[5M]**
	B	What are the advantages and limitations of photopolymerization technique compared to other additive manufacturing processes?	**L3**	**CO-V**	**[5M]**
		OR			
11	A	Discuss Selective Laser Sintering (SLS) and its impact on the production of functional parts	**L3**	**CO-V**	**[5M]**
	B	What types of materials are typically used in SLS, and why	**L3**	**CO-V**	**[5M]**

***